L20TR-4 TRASH RECYCLING CENTER

PRODUCT DIMENSIONS

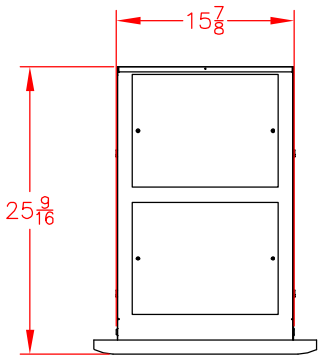

TOP VIEW

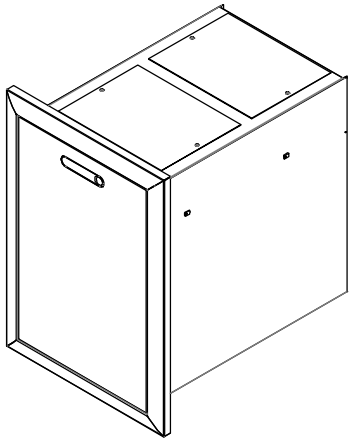

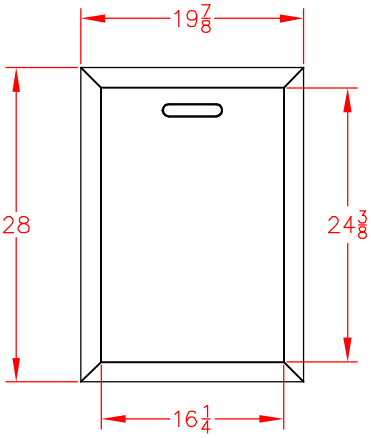

FRONT VIEW

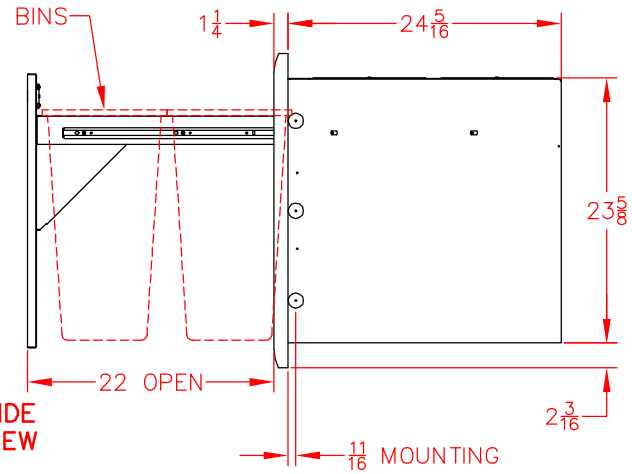

SIDE VIEW

CUTOUT DIMENSIONS

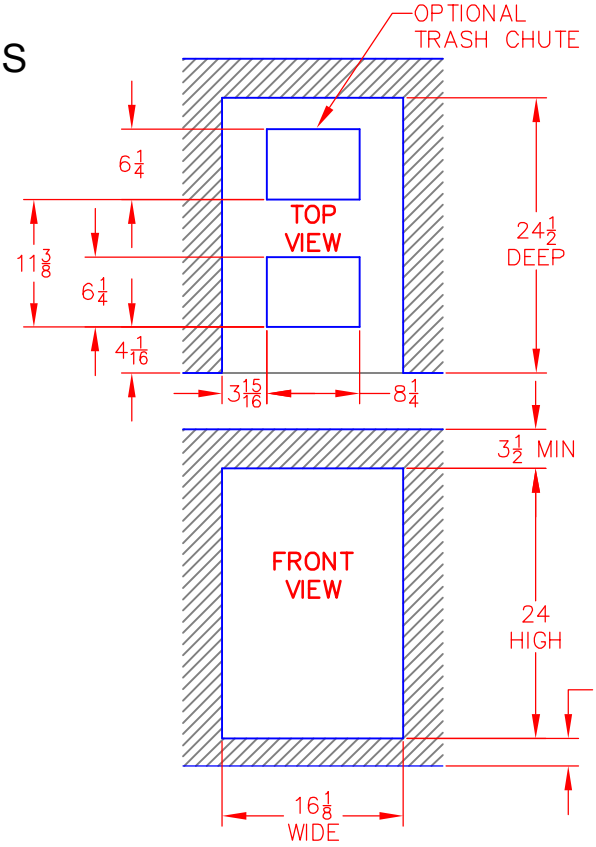

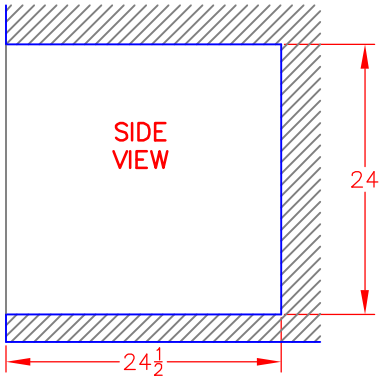

04/14/16