Easy-to-Follow

Instruction Manual

TV-Chimney Module assembly

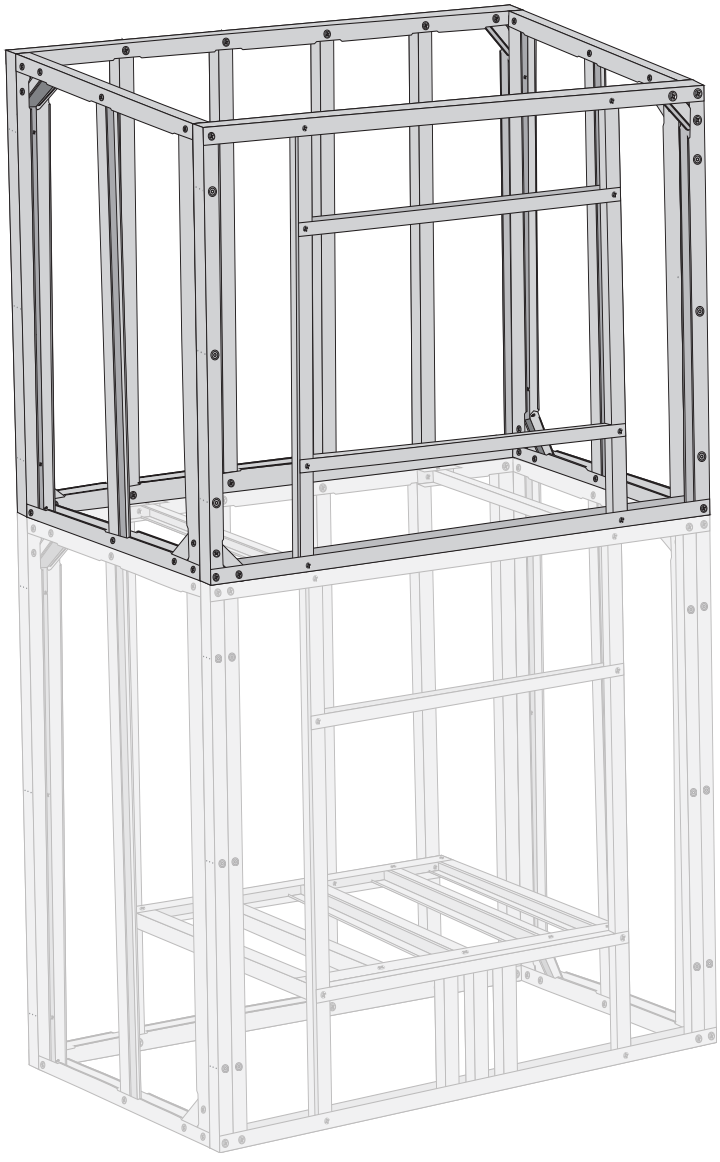

Copyright Notice

This instruction manual is protected under Copyright Law of the United States of America.

This copy of the instruction manual is for the sole use of the original purchaser. A license to use the information contained herein is granted to the original purchaser by the author.

No part of this instruction manual, including but not limited to, photographs, pictures, diagrams, or illustrations may be reproduced, copied or transferred in print or electronically to third parties without the express written permission of the author. Any copying, retransmission, editing or distribution without the express written permission of the author will terminate the license and all copies in the possession or distribution by the purchaser will be considered unlicensed and therefore in infringement of U.S. Copyright Law.

Furthermore, if the purchaser wishes to use the information contained herein for the creation or supplement of business, whereby BBQ islands would be part of the business, then the purchaser is not permitted to use or distribute any of the enclosed information within that business without the express written permission of the author.

Warnings

When working with metal, the edges are very sharp and may have small splinters across the edges. Be extremely careful when handling each piece. It is highly recommended to wear safety glasses and gloves at all times while building your modules. Eye protection is required when cutting or screwing metal pieces to protect against errant metal pieces and particles.

Keep children and animals away from the metal pieces and completed frame kits.

Please follow all manufacturer directions on how to properly install BBQ products.

Check with your local codes on construction for the required permits you may need for construction of your BBQ island.

Utility lines should only be installed by a licensed plumber or electrician per the code in your area. Do not forget to get a permit if required by local laws or regulations.

Please read all directions on how to install your DIYBBQ island modules. Installation of the product is at your own risk; DIYBBQ, LLC is not liable for misuse of the module frame kits nor for damage to any of your BBQ products.

Notice of Limited Liability

NOTICE: DIYBBQ, LLC shall **NOT** be liable for incidental and consequential damages, directly or indirectly sustained to any person(s), equipment, tools, or appliances during or after the installation of any BBQ island, related directly or indirectly to the installation and operation of any BBQ island or appliances, nor for any loss caused by application of these goods not in accordance with current printed instructions or for other than the intended use. DIYBBQ, LLC's liability is expressly limited to replacement of defensive goods. Any claim shall be deemed waived unless made in writing to DIYBBQ, LLC at 26520 ADAMS AVE., MURRIETA, CA 92562 within thirty (30) days from the date it was or reasonably should have been discovered.

Arbitration Agreement

USE OF OR PURCHASE OF ANY DIYBBQ, LLC PRODUCTS, OR ANY GOODS AVAILABLE FOR PURCHASE THROUGH DIYBBQ.COM REQUIRES THAT ALL CLAIMS BE SETTLED UNDER THIS BINDING ARBITRATION PROVISION, WHICH AFFECTS YOUR LEGAL RIGHTS AND MAY BE ENFORCED BY EITHER PARTY.

In the event a dispute shall arise between DIYBBQ, LLC and any purchaser of any DIYBBQ, LLC product or good available through diybbq.com, it is hereby agreed that the dispute shall be referred to a USA&M office to be designated by USA&M National Headquarters for Arbitration in accordance with the applicable United States Arbitration and Mediation Rules of Arbitration. **The arbitrator's decision shall be final and legally binding, and judgment may be entered therein.**

Each party shall be responsible for its share of the arbitration fees in accordance with the applicable Rules of Arbitration. In the event a party fails to proceed with arbitration, unsuccessfully challenges the arbitrator's award or fails to comply with the arbitrator's award, the other party opposing party is entitled to costs of suit, including a reasonable attorney's fee for having to compel arbitration or defend or enforce the award.

If you are still having trouble putting your module together, we are here to help. Contact us at 800-289-3492 or email support@diybbq.com.

Tools for Assembly

Vise Clamps

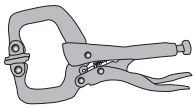

Cutoff Wheel

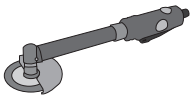

Aviation Snips

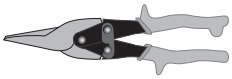

Cordless Drill

Tape Measure

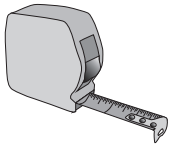

Marker

Carpenter Square

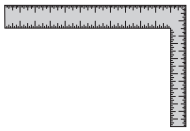

Magnetic Level

Pick

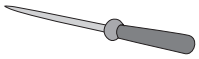

Hammer

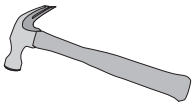

Rafter Square

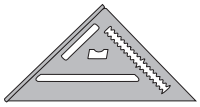

Spring Clamps

Professional Tips

Proper Safety equipment is extremely important.

Always wear safety glasses and gloves when assembling your modules.

Using proper tools will make the project much easier to do and will help you obtain a properly built project. This list is of the basic tools you'll need to build your modules. You may use whatever tools you deem necessary to complete your project in the easiest way possible. All tools listed here and others you may wish to acquire can be found at Lowes®, Home Depot®, Amazon and other on-line retailers.

A cordless impact driver will make steel frame assembly easier and help protect the edges of the HardieBacker® cement board from cracking during installation onto the frame.

Useful Terms

Unassembled Module: A complete module set that must be completed from the ground-up.

Assembled Module: A complete module set in which all of the Perimeter walls and Cross Channel walls are pre-assembled prior to shipping.

Perimeter Walls: The front and back walls of a module.

Cross Channel Wall: The side walls of a module that connect to the Perimeter walls.

Track: The top and bottom pieces of a Perimeter or Cross Channel wall.

Stud: The sides and inside pieces of a Perimeter or Cross Channel wall.

Angle Brace: A piece that supports the tracks to the outer studs of the front and back walls of an unassembled module.

Countertop Stud (CTS): Pieces that slide perpendicular into a Catch Track to support the Appliance Tracks as well as the appliance, door or drawer.

Dimple: The indentation around a precut hole within a track or a stud.

Web Holes: The small, precut holes, usually appearing in sets of three on the back side of a Cross Channel wall that act as a guide for drilling when attaching Cross Channel walls to the front and back walls of a module.

Assuage: The small creases that appear on the ends of a stud that allows for easier assembly (see image to right).

Catch Track: An additional stud that runs perpendicular to Perimeter and Cross Channel walls within the center of a module. (Used in specialty and cutout modules.)

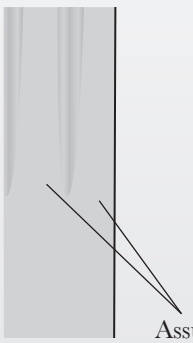

Assuage

What's in the box

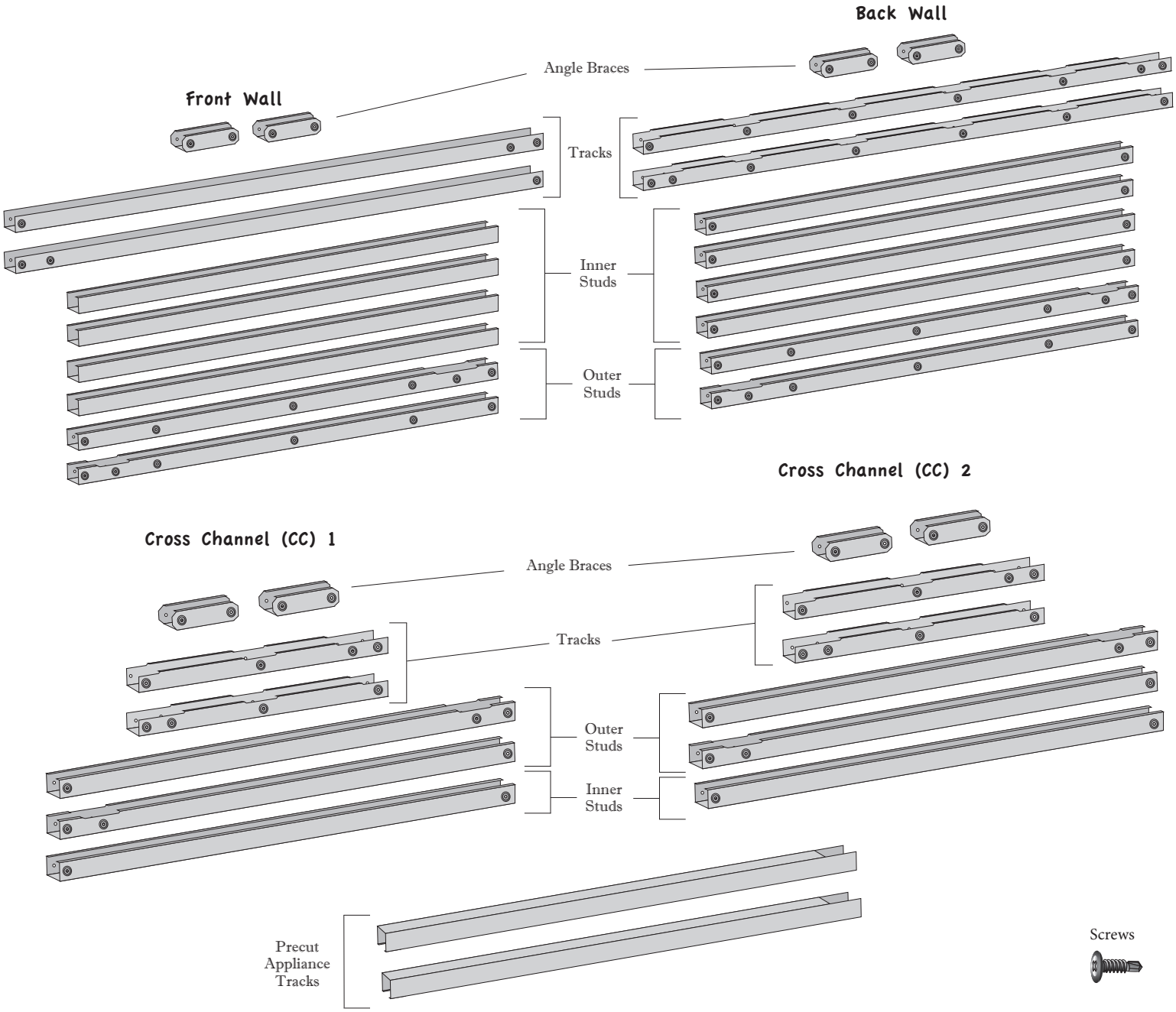

Check List

- [ ] 8 Angle Braces
- [ ] 8 Tracks (The tracks for the front wall do not include lips or slats for better maneuverability of studs and for easier cutout insertion.)
- [ ] 8 Outer Studs
- [ ] 10 Inner Studs (The inner studs for the front wall do not include any pre-drilled holes because they are adjustable, allowing for a universal fit of all cutouts.
- [ ] 2 Precut Appliance Tracks
- [ ] 132 Self-Tapping Screws

Step 1

Align the tracks so that the double dimpled holes are opposite one another.
Note: When aligned correctly, the text printed on each stud will read exactly the same.

Step 2

Spread out the pieces to form a loose framework of the wall prior to attaching anything.
Note: Keep the inner studs off to the side. These will be placed later in accordance with the placement of the television.

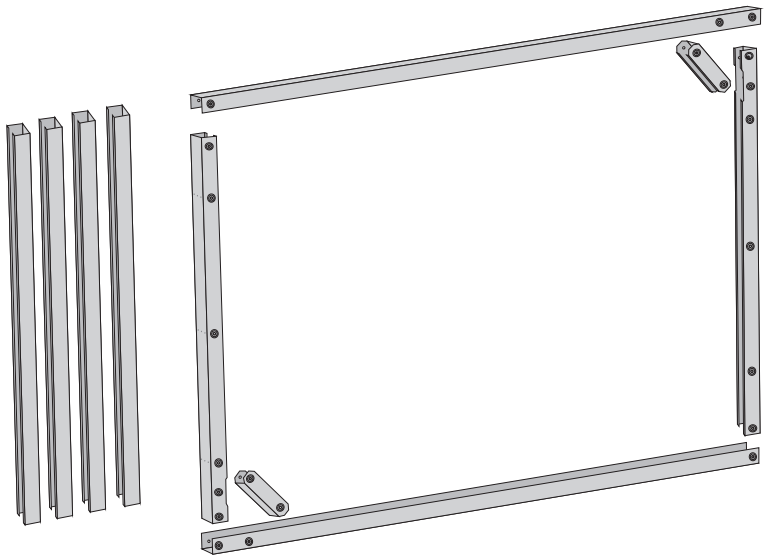

Step 3

Place one end of the first angle brace into the left stud.
Note: You may place the angle brace into either the stud or the track first, however, it's easier to maneuver the brace into the opposite piece if you first slide your angle brace into the smaller of the two pieces.

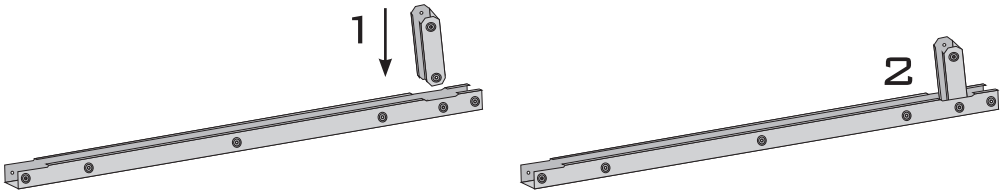

Professional Tip - Placing The Angle Brace

Avoid pinching your fingers in between the angle brace and the stud or track by holding the angle brace at the top most half (as opposed to the bottom most half).

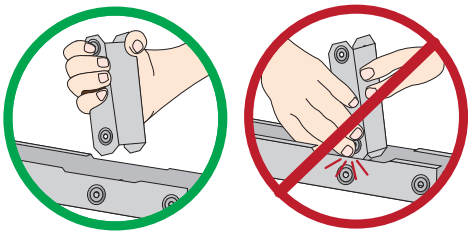

Place the angle brace with the inside facing the center of the stud or track. When placed the opposite way, a gap will form and the angle brace will no longer be flush.

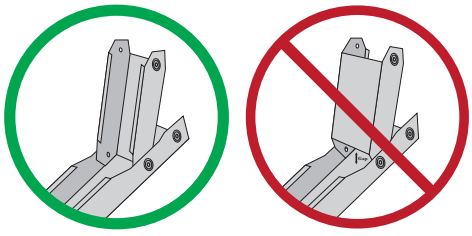

Step 4

Slide the other side of the angle brace into the corresponding track and then easily swing the stud into place on the edge of the track.

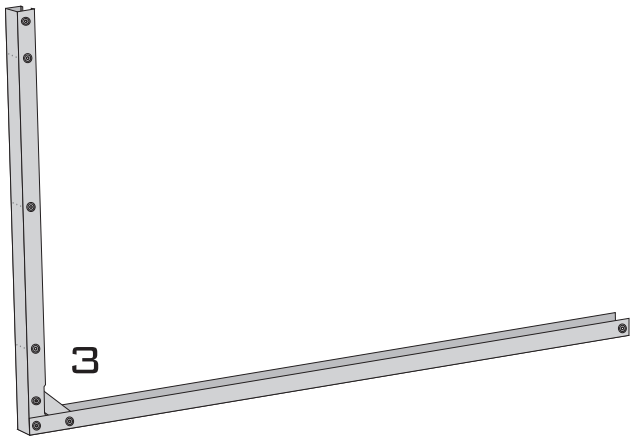

Step 5

Repeat steps 3 and 4 to attach the second angle brace to the opposite stud and track. You should now have two L-shaped pieces. Slide the unattached ends together and make sure that all corners are flush.

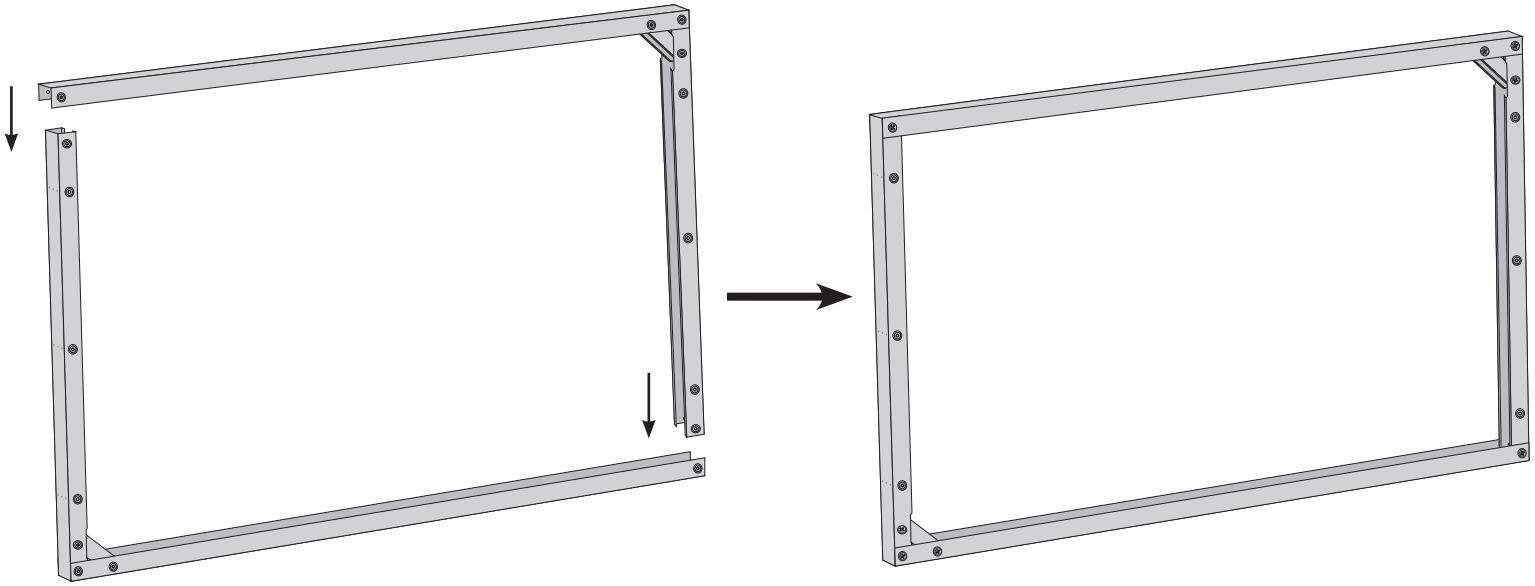

Professional Tip - Flush Corners

When placing two corners together, the pieces may not always appear completely flush. This is okay. The integrity of the module will not be affected.

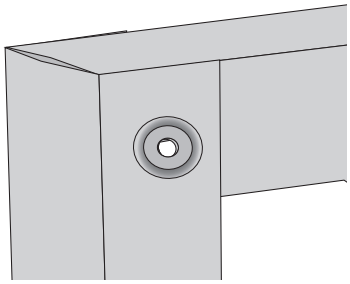

Step 6

Drill six (6) screws into the pre-drilled holes across the top and bottom tracks, as well as two (2) screws into the studs where the angle braces rest (for a total of eight (8) screws)
Note: Begin with the Corner (see Inset), then finish screwing the angle brace before moving counterclockwise around the frame.

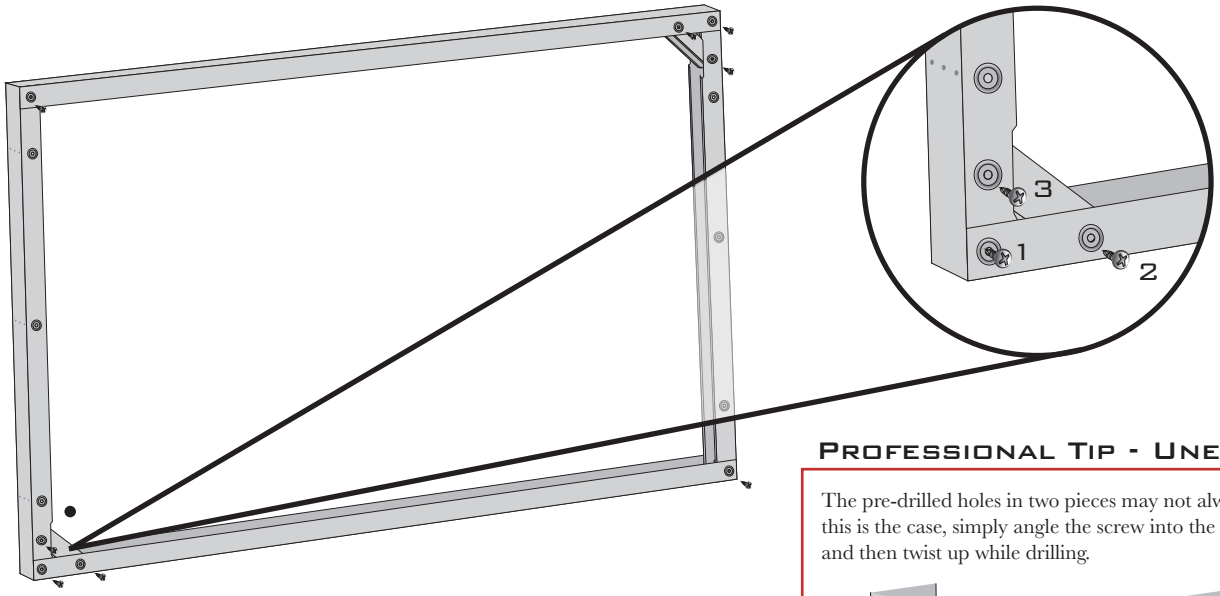

Professional Tip - Uneven Holes

The pre-drilled holes in two pieces may not always align perfectly. If this is the case, simply angle the screw into the opening of both holes and then twist up while drilling.

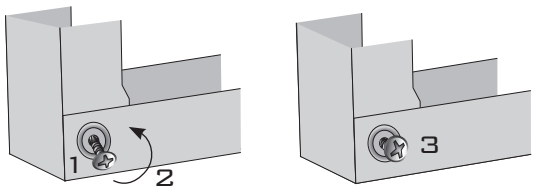

Step 7

Flip the frame over and repeat step 6 on the opposite side. You should now have a completed frame wall with a set of separate studs that will be added and adjusted once the entire module has been completed.

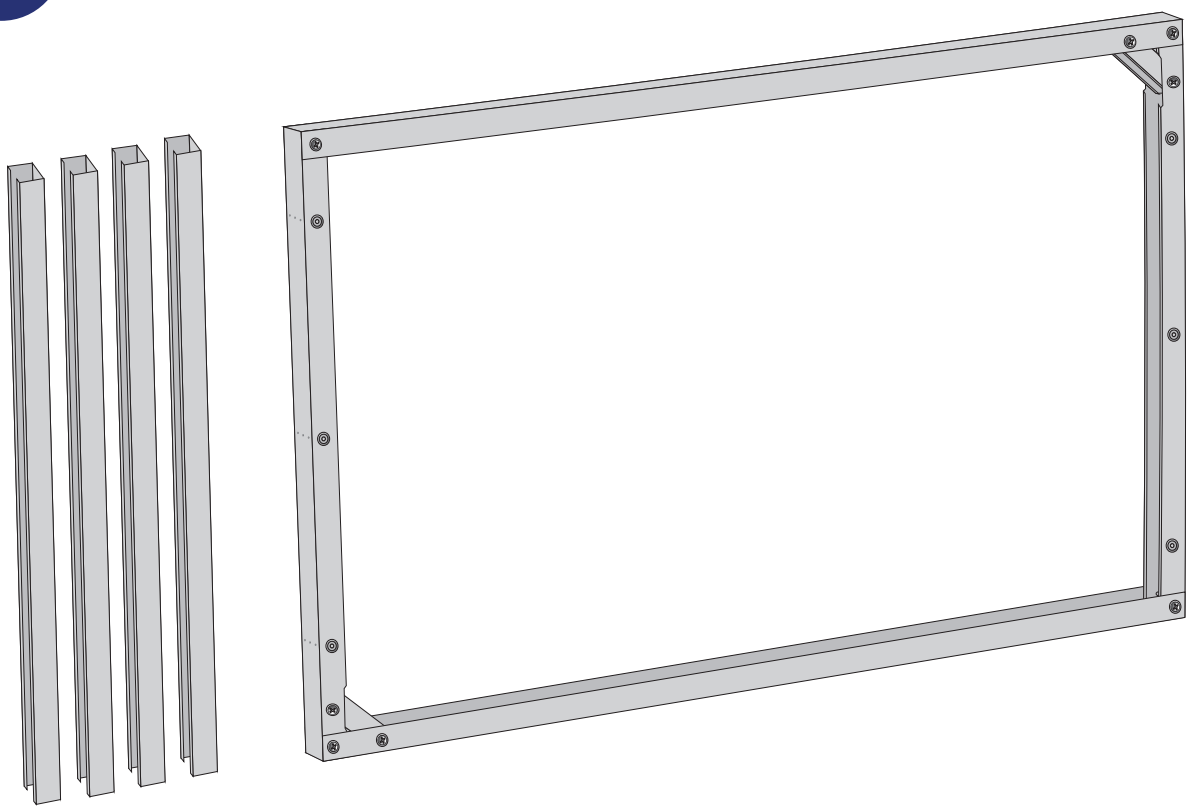

Step 1

Align the tracks so that the double dimpled holes are opposite one another.
Note: When aligned correctly, the text printed on each stud will read exactly the same.

Professional Tip - Aligning Cuts

When aligning the tracks for the back of the module, if the center cuts of each track are misaligned, one of the tracks needs to be flipped so that the center cuts of both tracks line up.

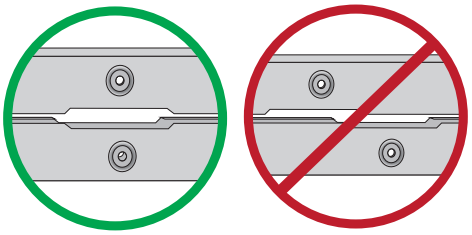

Step 2

Spread out the pieces to form a loose framework of the wall prior to attaching anything.
Note: Unlike the front wall, the center studs will be positioned within the frame and remain fixed in place.

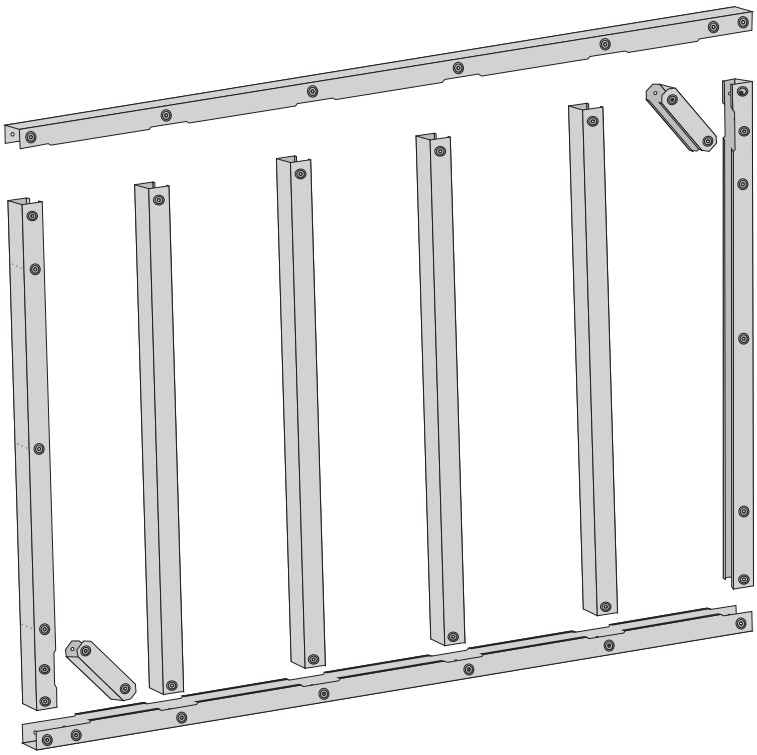

Step 3

Place one end of the first angle brace into the left stud.
Note: You may place the angle brace into either the stud or the track first, however, it's easier to maneuver the brace into the opposite piece if you first slide your angle brace into the smaller of the two pieces.

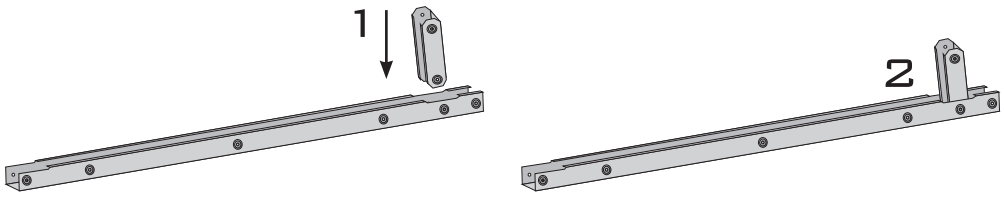

Step 4

Slide the other side of the angle brace into the corresponding track and then easily swing the stud into place on the edge of the track.

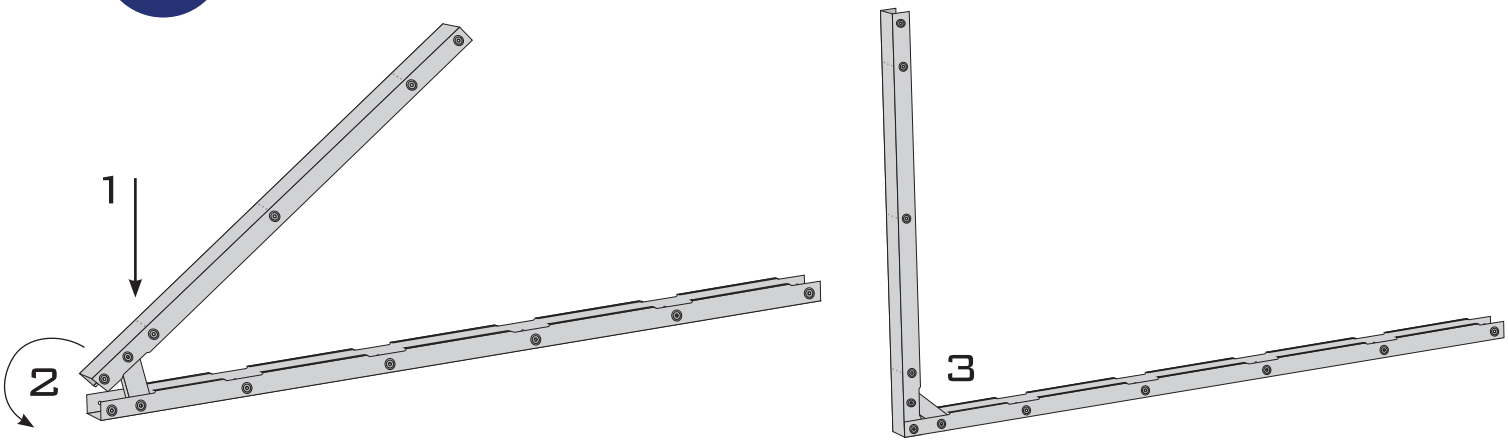

Step 5

Repeat steps 3 and 4 to attach the second angle brace to the opposite stud and track. You should now have two L-shaped pieces.

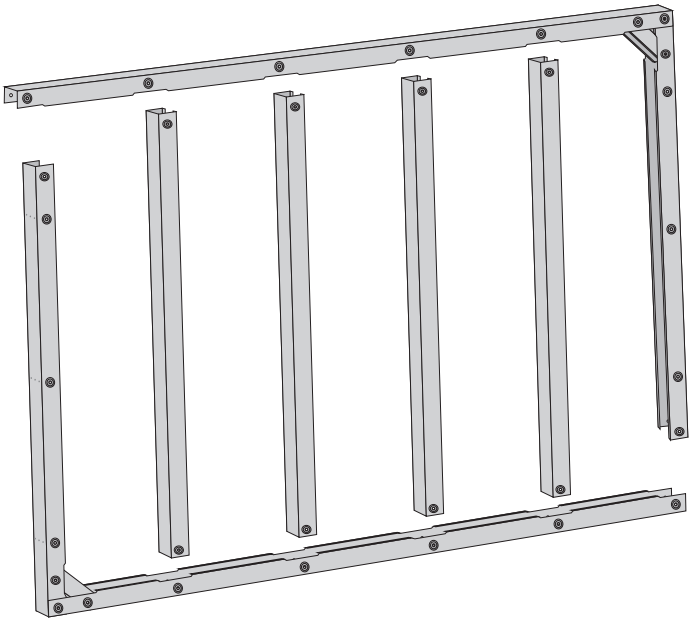

STEP 6

Slide each center stud into the bottom track. Make sure that each of the precut holes line up.
Note: Each stud has a number reference, where Stud 1 will sit on the right with each number running consecutively to the left. This isn't necessary, but keeps everything organized.

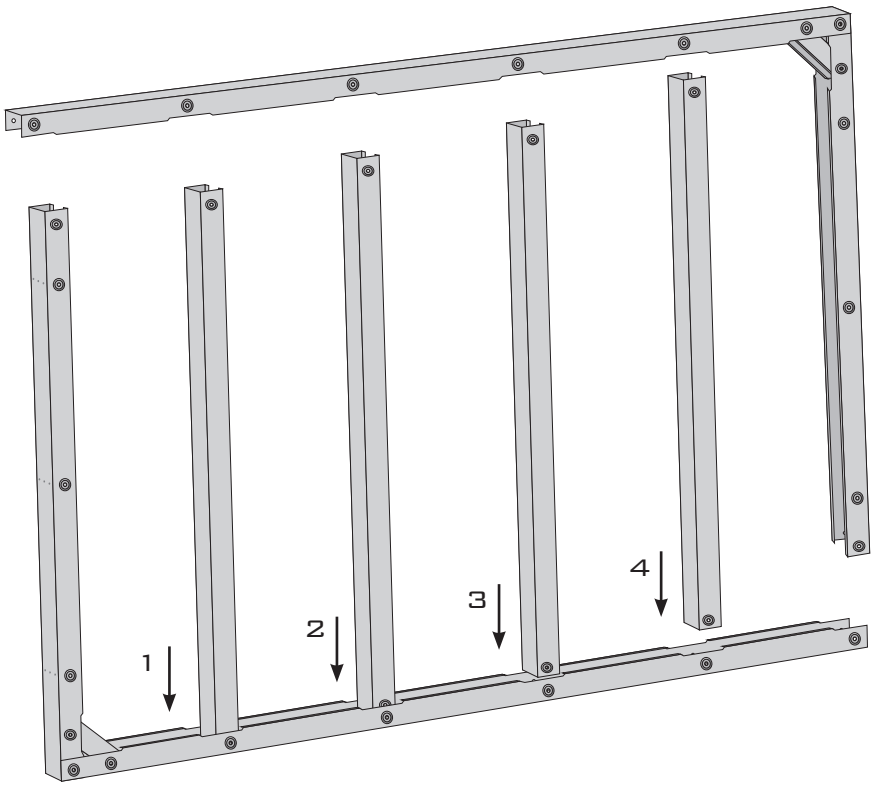

STEP 7

Slide the second L-Shape piece into the end of the bottom track.
Note: When sliding the stud into the track, the top track may bend up slightly. Do not worry. This will be adjusted in the next step.

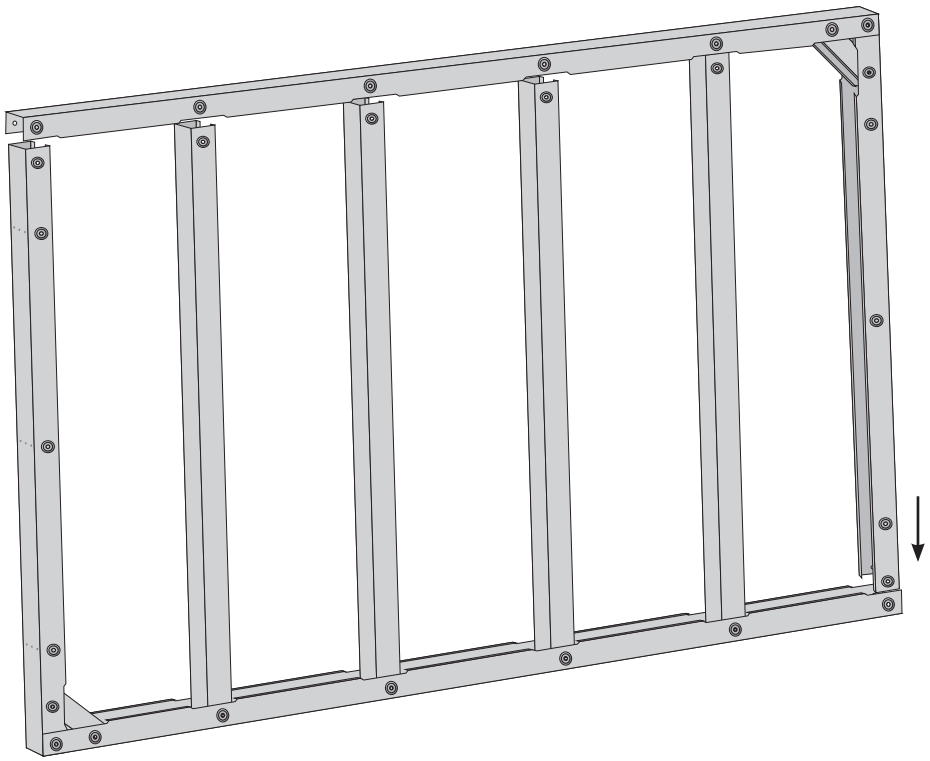

Step 8

Adjust the top of each stud so that they fit comfortably inside the top track. Then use the butt of your palm to carefully but firmly hit each stud into the top track so that all precut holes in both the track and studs are aligned.
Note: If the studs do not slip right in when hit, readjust the studs and then reapply pressure to the track.

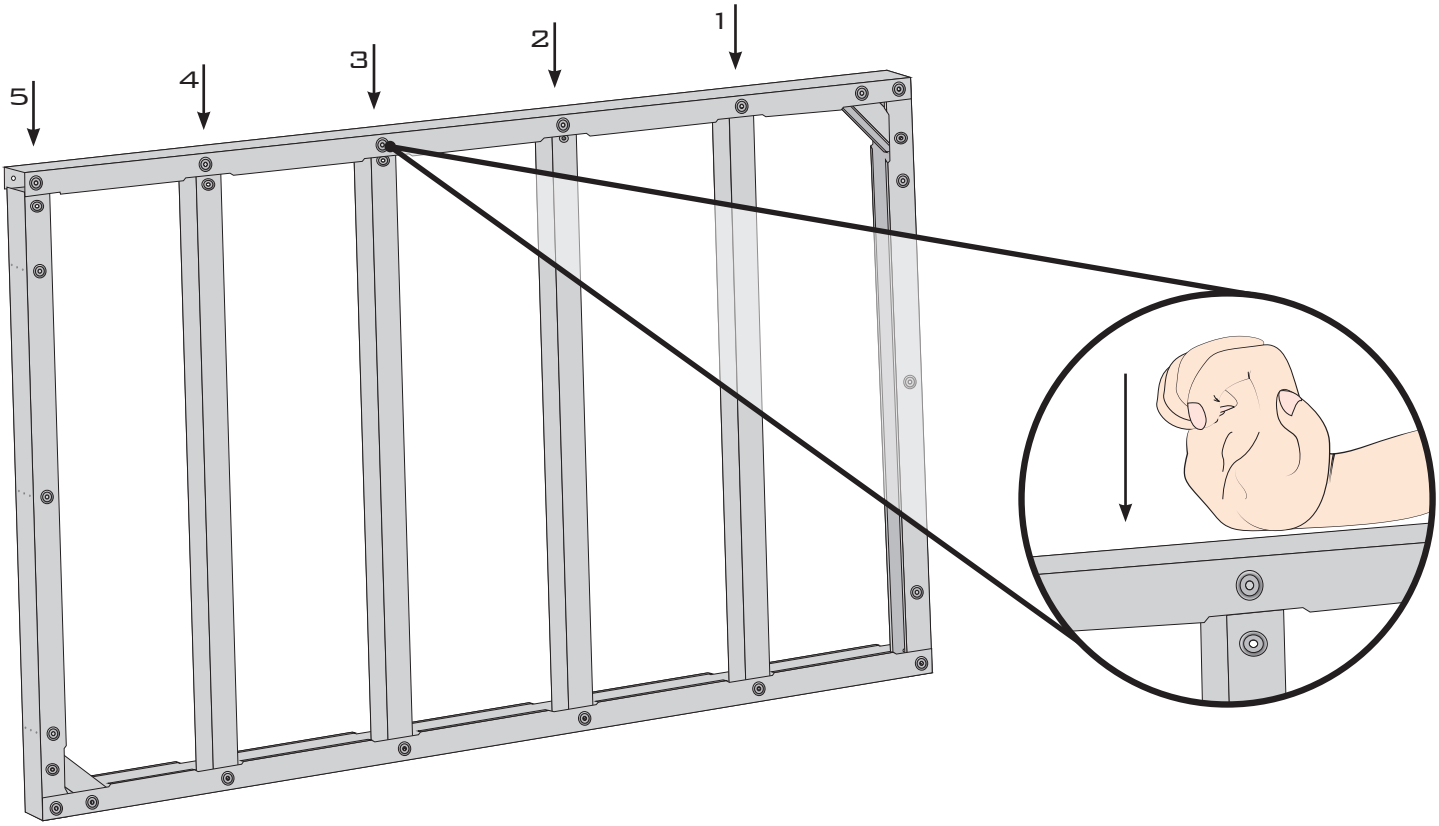

Step 9

Drill fourteen (14) screws into the pre-drilled holes across the top and bottom tracks, as well as two (2) screws into the outer studs where the angle braces rest (for a total of sixteen (16) screws). When complete, flip the wall over and drill sixteen (16) additional screws into the opposite side. You should now have a completed frame wall.

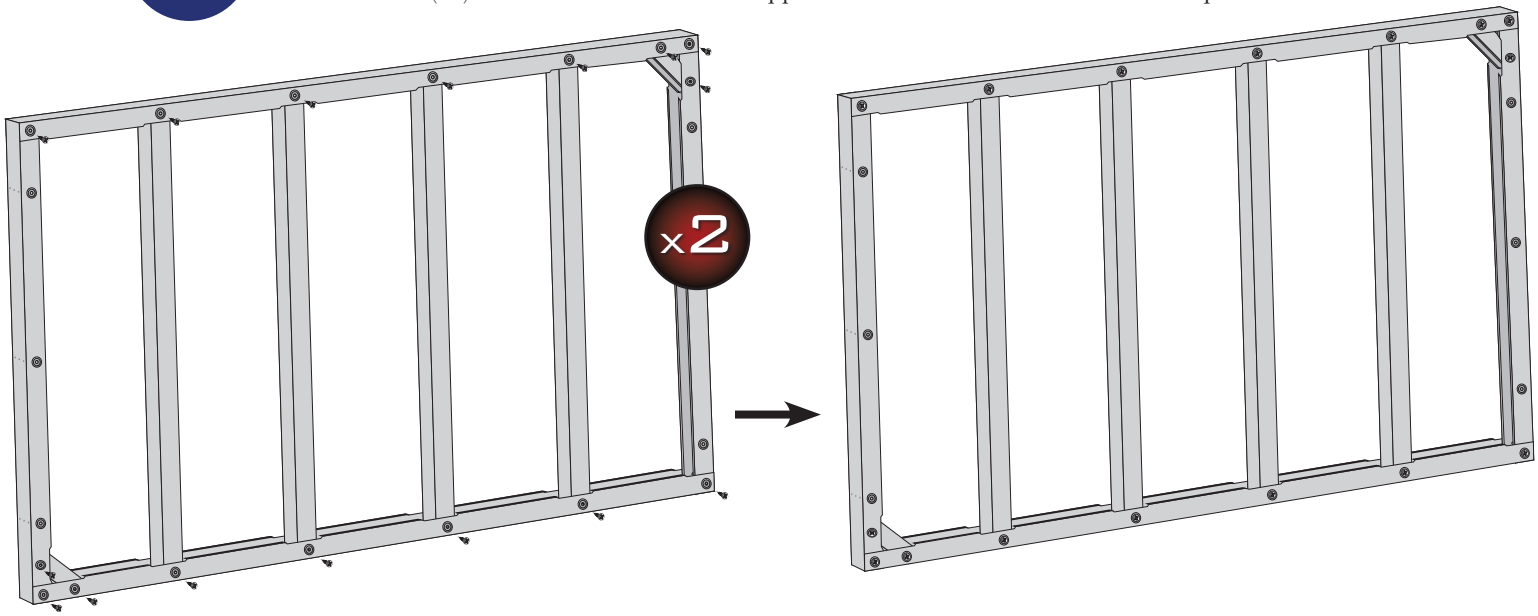

Step 1

Align the tracks so that the double dimpled holes are opposite one another.
Note: When aligned correctly, the text printed on each stud will read exactly the same.

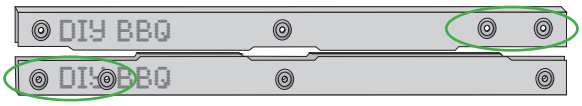

Step 2

Spread out the pieces to form a loose framework of the wall prior to attaching anything.

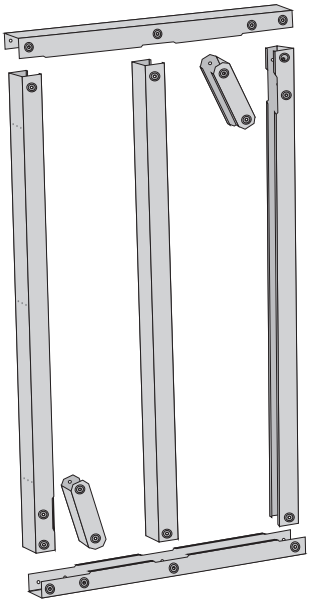

Step 3

Place one end of the first angle brace into the bottom track.
Note: You may place the angle brace into either the stud or the track first, however, it's easier to maneuver the brace into the opposite piece if you first slide your angle brace into the smaller of the two pieces.

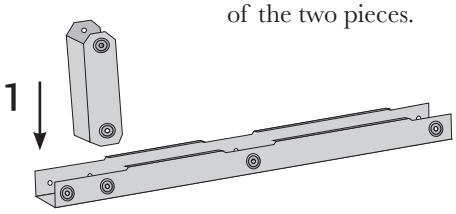

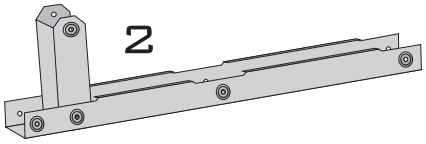

Step 4

Slide the other side of the angle brace into the corresponding stud and then easily swing the track into place on the edge of the stud. Reconfigure the pieces so that the track rests at the bottom.

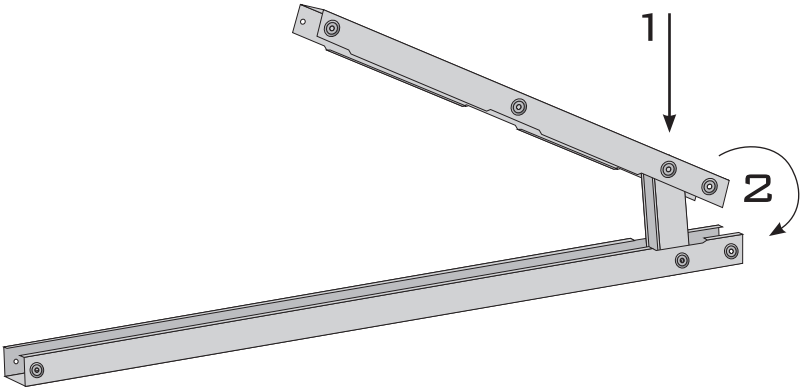

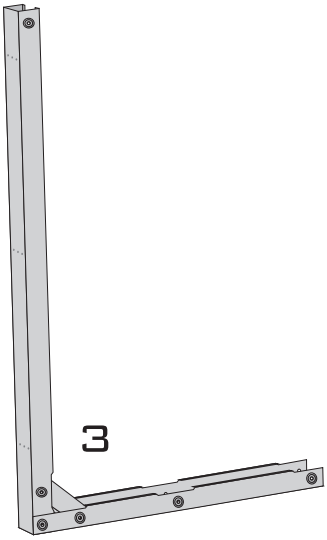

Step 5

Repeat steps 3 and 4 to attach the second angle brace to the opposite stud and track. You should now have two L-shaped pieces.

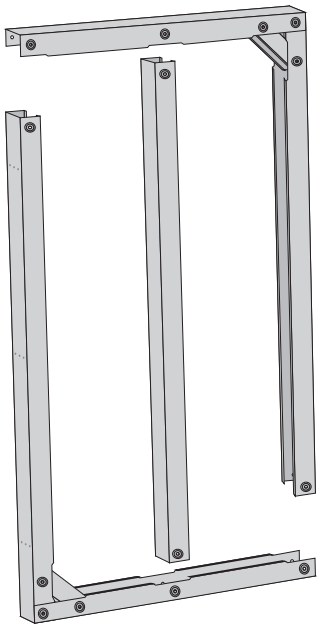

Step 6

Slide the center stud into the bottom track. Make sure that the precut holes match up.

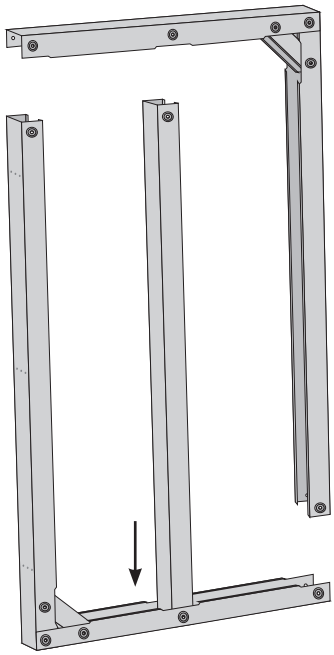

Step 7

Slide the second L-Shape piece into the open end of the bottom track. **Note:** When sliding the stud into the track, the top track may bend up slightly. Do not worry. This will be adjusted in the next step.

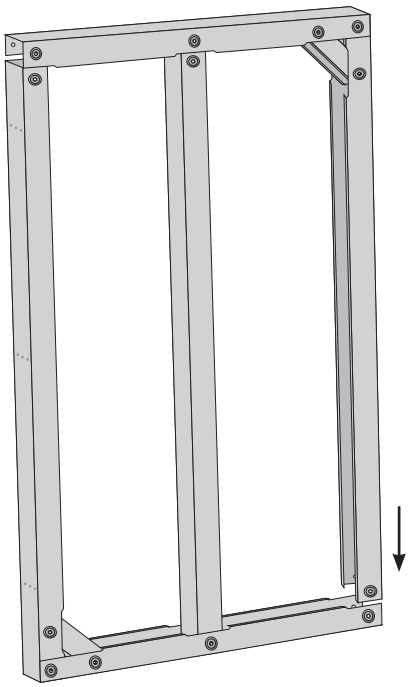

Step 8

Adjust the top of each stud so that they fit comfortably inside the top track. Then use the butt of your palm to carefully, but firmly, hit each stud into the top track so that all precut holes in both the track and studs are aligned.

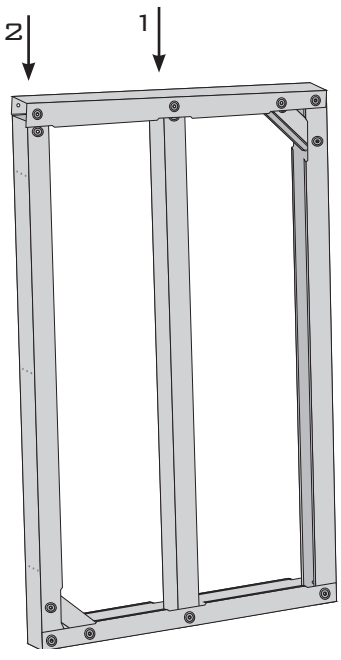

Step 9

Drill screws in all ten (10) pre-drilled holes. When complete, flip the wall over and drill ten (10) additional screws into the opposite side. You should now have a completed frame wall.

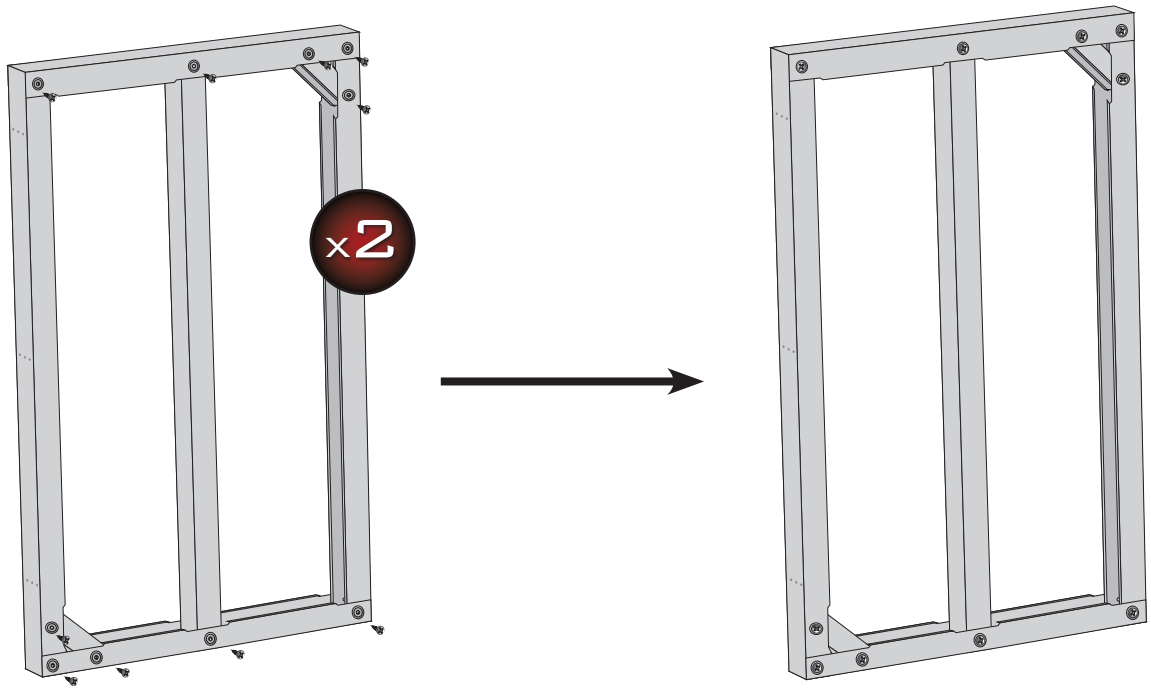

Step 10

Repeat steps 1 through 9 for the second CC wall. You should now have two complete Cross Channel walls.

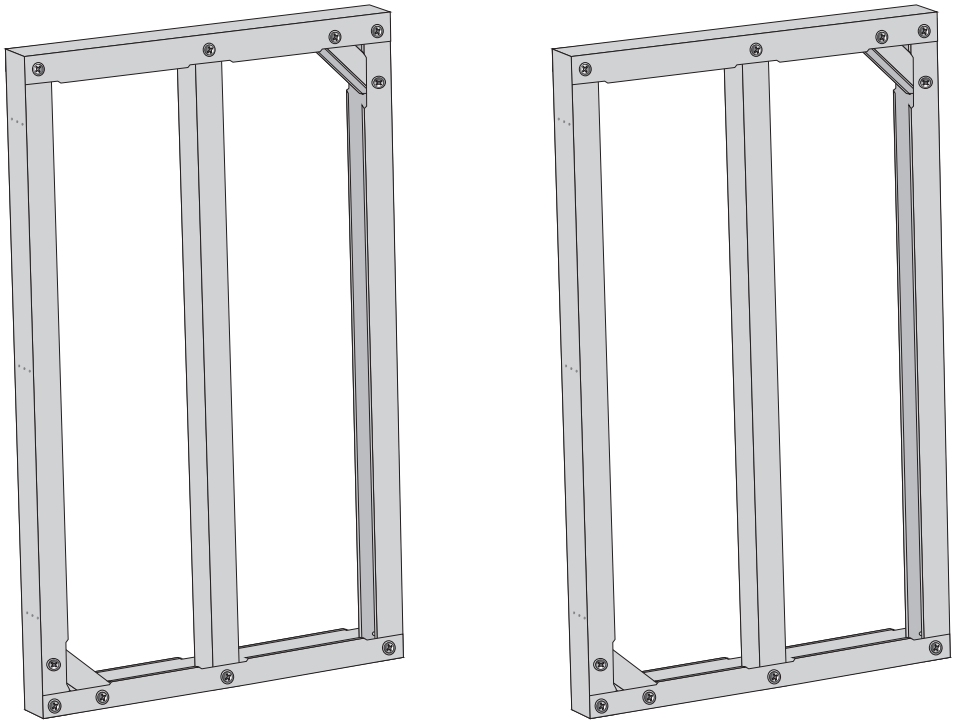

Step 1

Make sure you have all of your assembled pieces.

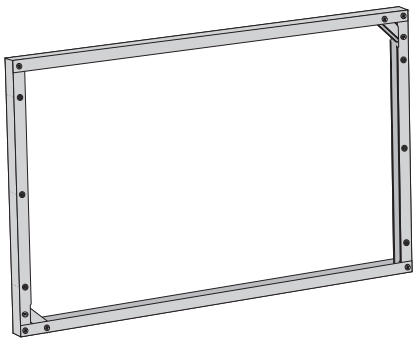

Front Perimeter Wall

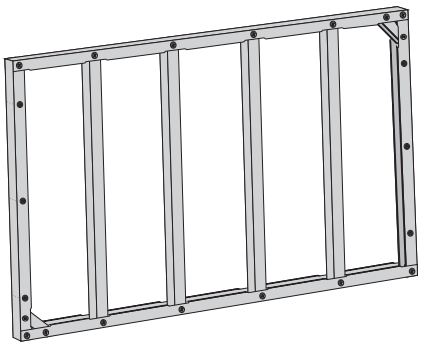

Back Perimeter Wall

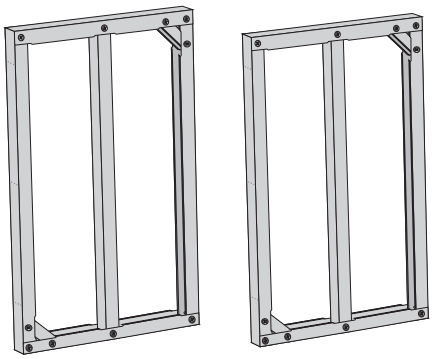

Cross Channel (CC) Walls

Step 2

Slide the left Cross Channel (CC) wall so that it aligns perpendicular to the edge of the left side of the back Perimeter wall.

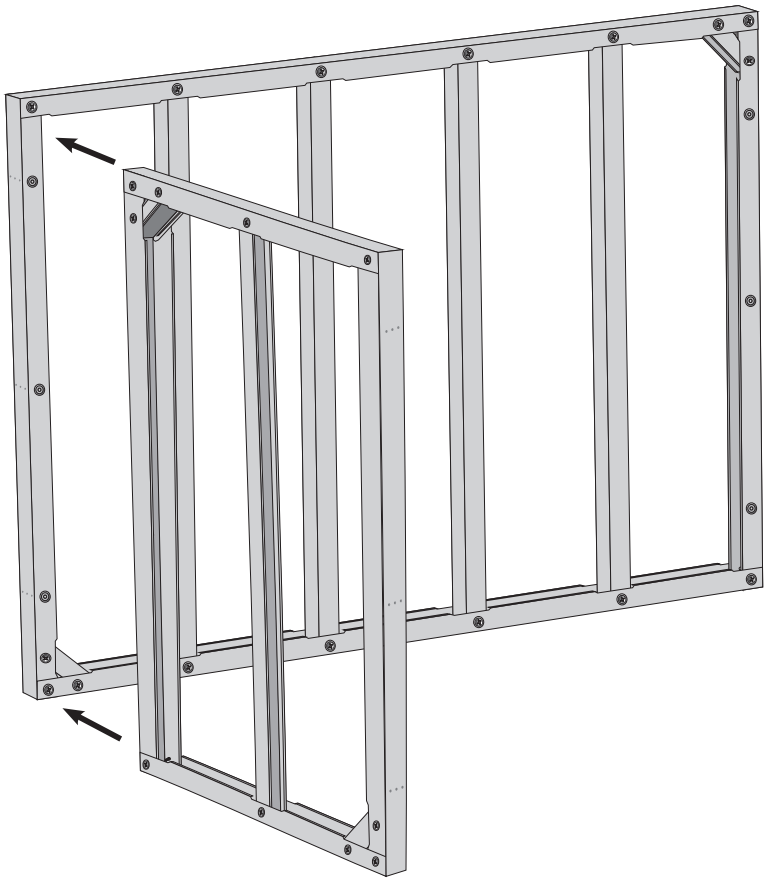

STEP 3

Attach the CC wall to the back Perimeter wall by drilling at least five (5) screws through the pre-drilled web holes found on the inner side of the CC wall.

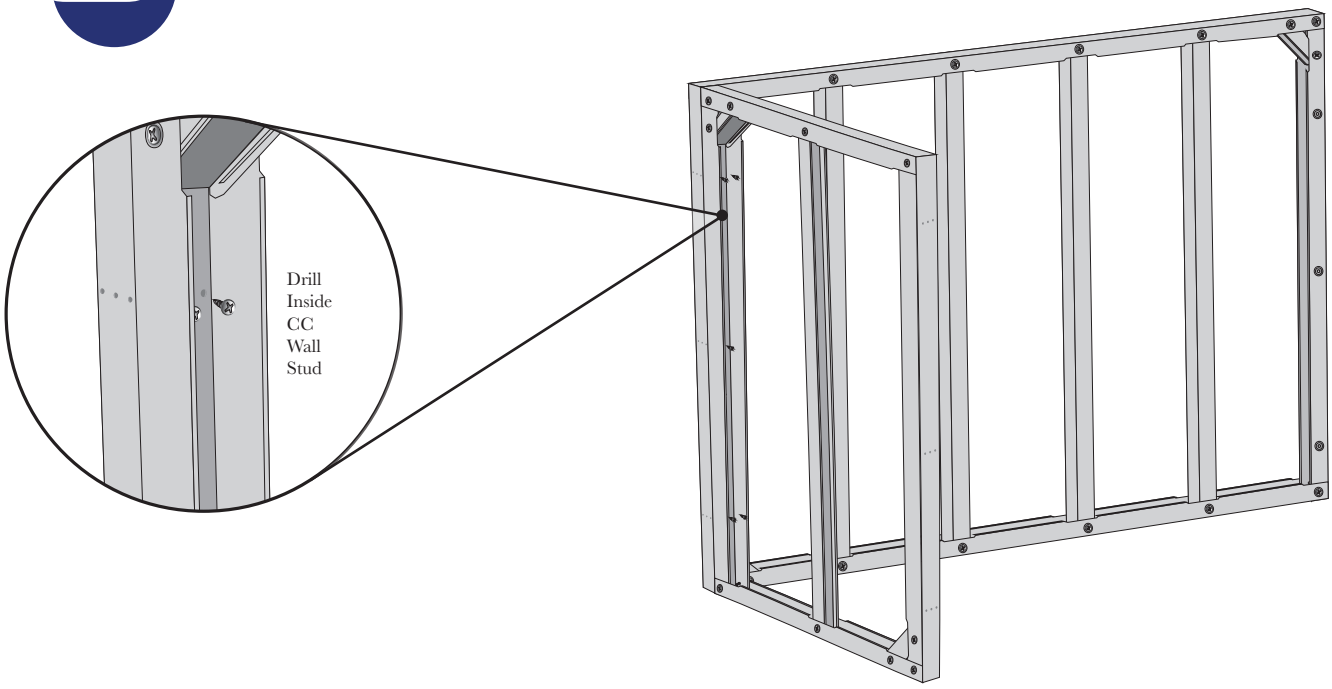

PROFESSIONAL TIP - ATTACHING CCS TO PERIMETER WALLS

Each outer stud of a Cross Channel wall includes a series of pre-cut web holes for easy drilling. For strongest integrity, use at least two screws in the top set, one in the center set and two in the bottom.

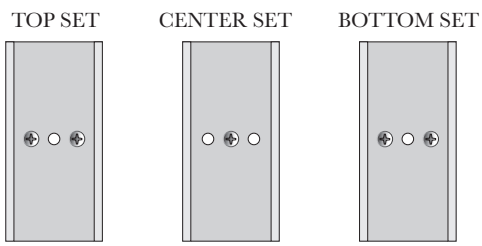

STEP 4

Repeat steps 2 and 3 to attach the second CC wall to the right back Perimeter wall.

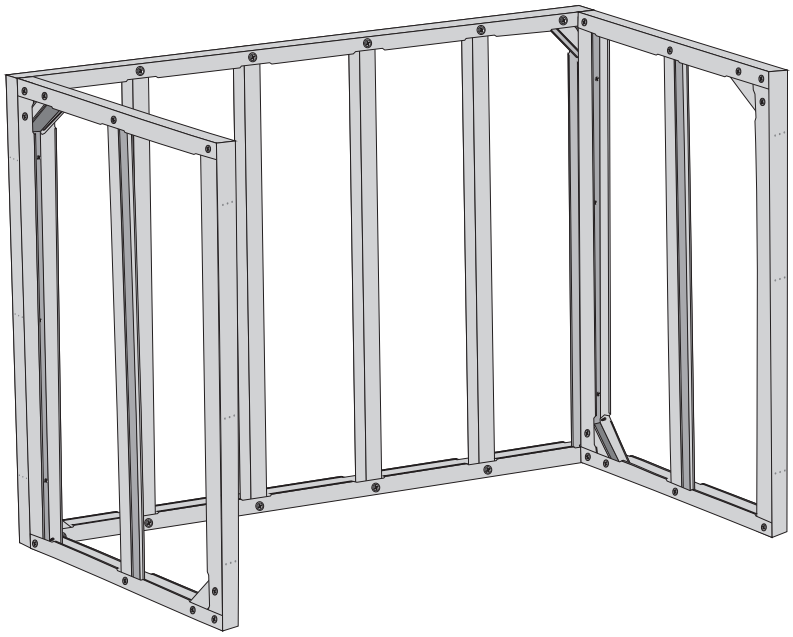

STEP 5

Place the front Perimeter wall in place and drill screws through the web holes (as seen in step 3) to attach the front wall to both CC walls.

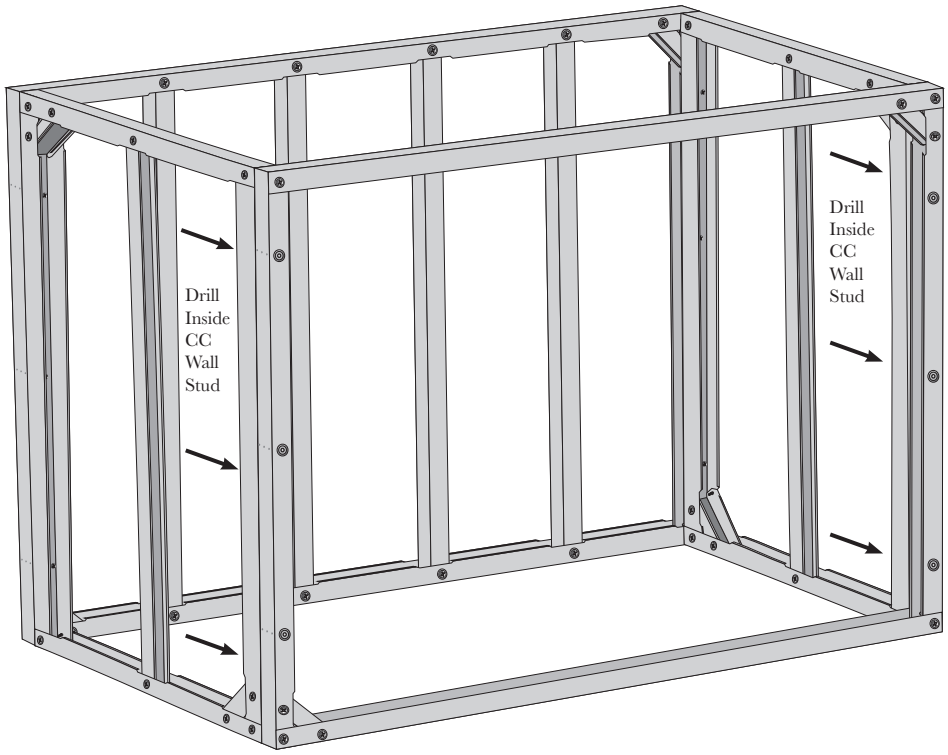

STEP 6

Find the two front wall studs and insert them into the frame. (Do not worry about where they are, these will be adjusted in the next step.) Make sure that the open ends of each stud are pointing away the center (toward the outer edges of the frame).

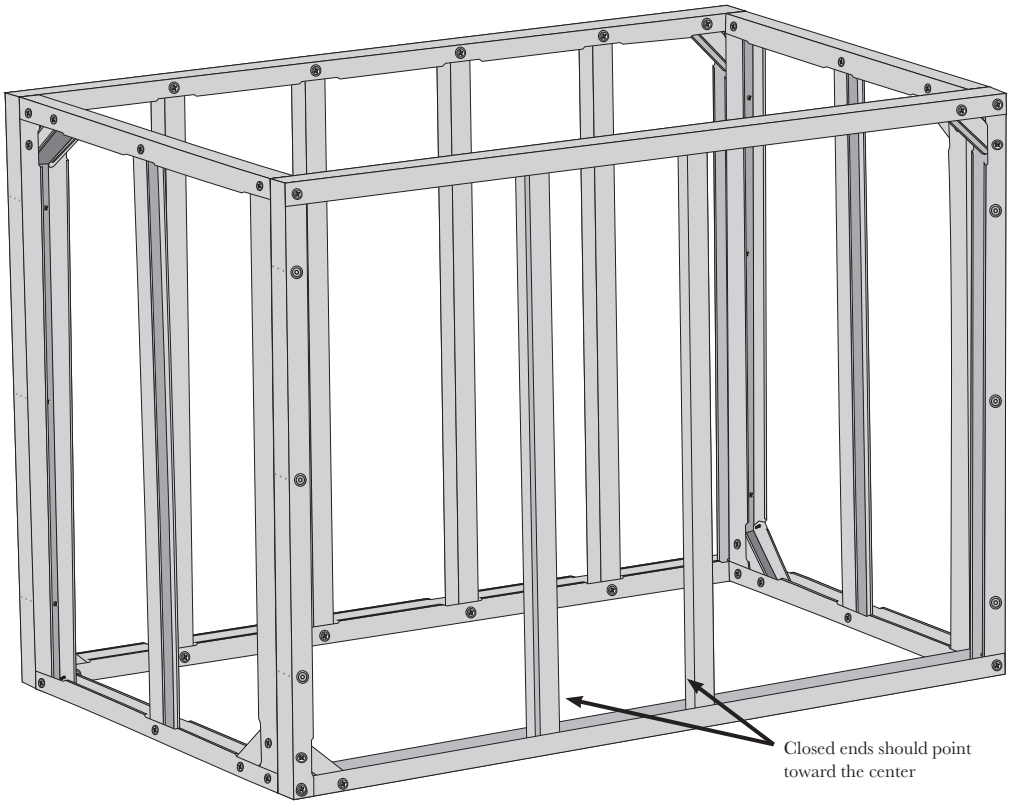

Step 7

Measure the width of the studs from the inside edges (see marked) so that the space between them is a few inches larger than the length of the television to be placed.

Note: You may want to measure from the center stud to the outside stud on each side to make sure they are centered within the frame.

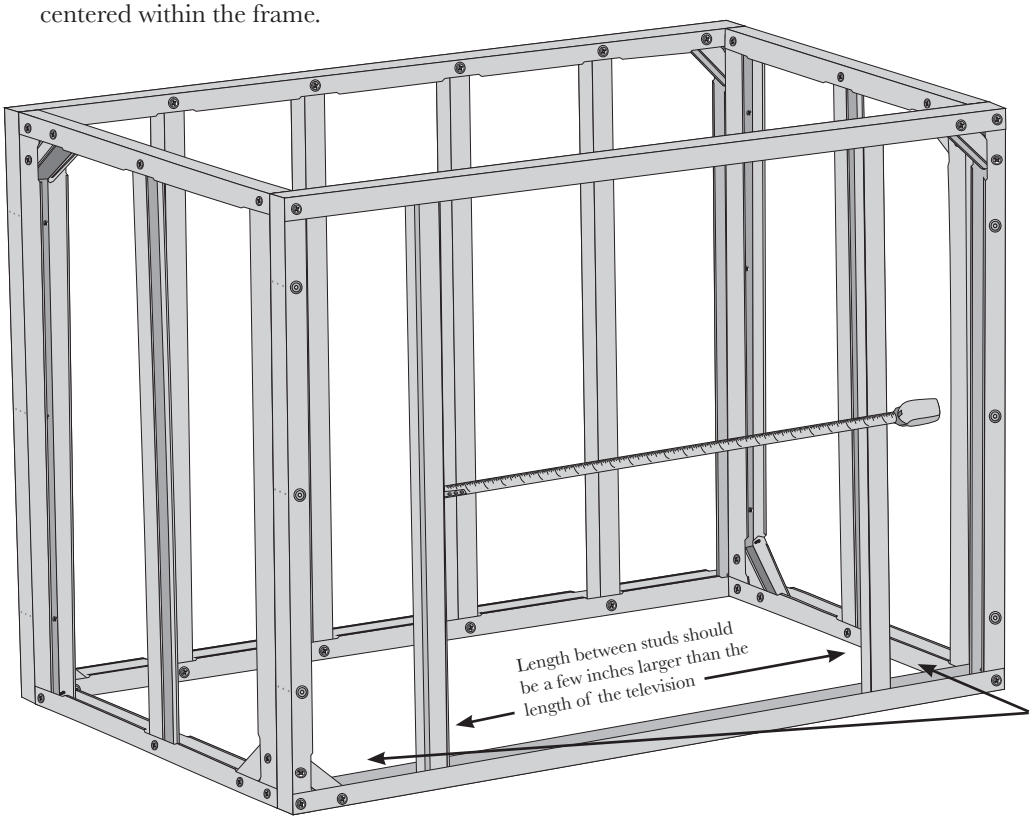

Step 8

Drill four screws into the top and bottom of the studs (for a total of eight (8) screws) to attach the inner studs to the front Perimeter wall tracks.

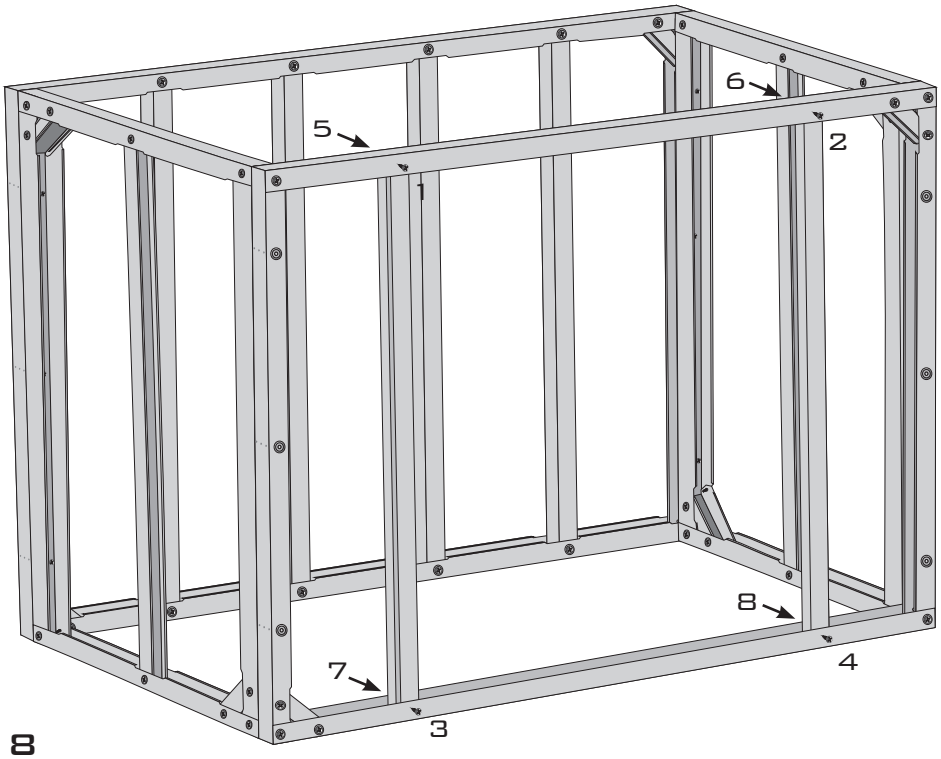

Professional Tip - Drilling Screws Into Metal

Though the screws you'll use to assemble your cutouts are self-tapping, it can still be difficult to drill without a guide. If you find it difficult to drill your screws into the metal, start by placing the end of a pick where you would like to place your screw and gently tap the end of the pick with a hammer. This will make a small indent in the metal that you can rest your screw into.

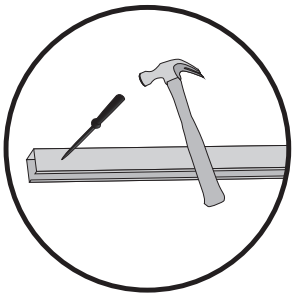

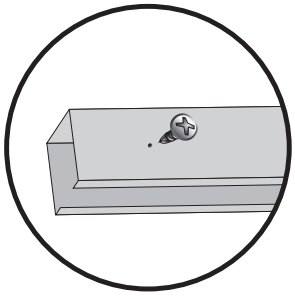

STEP 9

Measure 12” up from the bottom of the module and mark each stud accordingly with a marker.

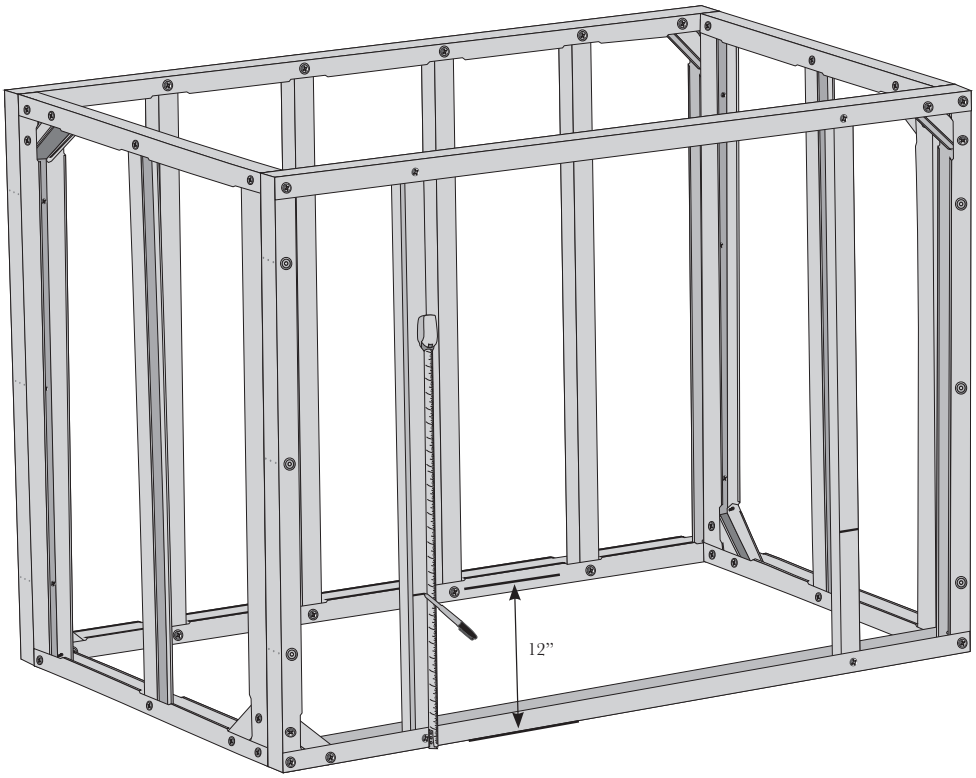

STEP 10

Find the first precut track and place it in between the inner front Perimeter wall studs near the bottom of the module so that the top (flush side) of the precut track aligns with the marks made in step 9. (The top edge of the precut track should be 12” from the bottom.) Make sure the open side of the precut track is facing down. If you want to make sure the precut track remains in place while attaching it to the Perimeter wall studs, add at least one clamp to secure it to the studs. Clamp(s) may be removed after step 12. (See inset)

Note: Turn to page 25 for instructions on how to measure (depending on size of television) and cut the second end of your precut track.

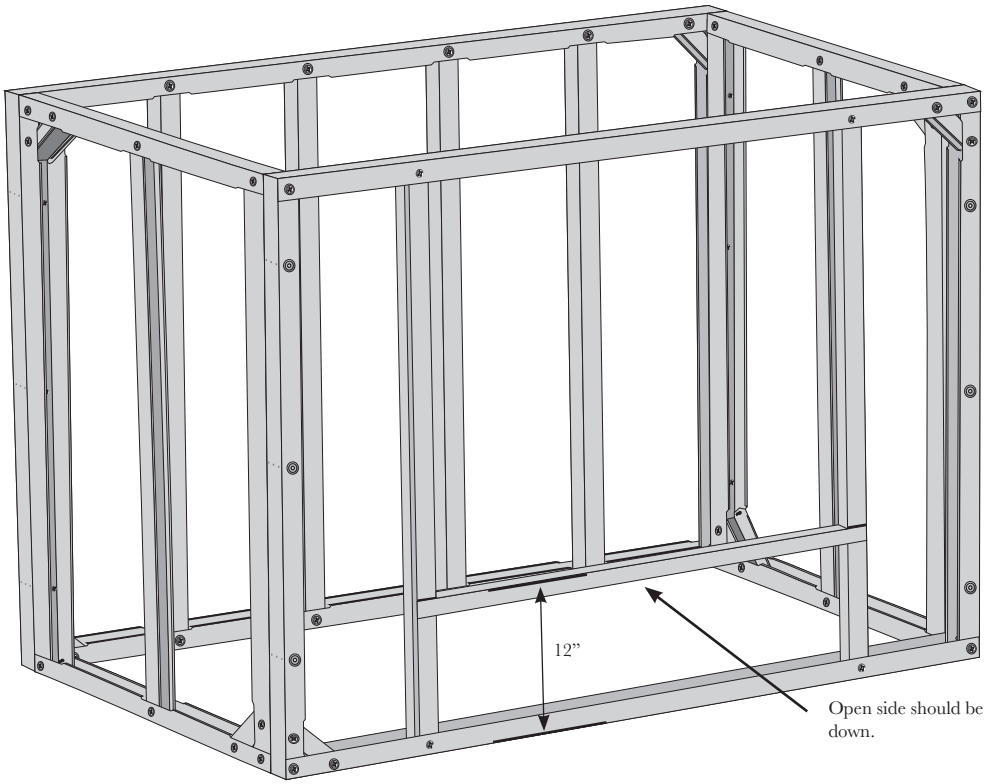

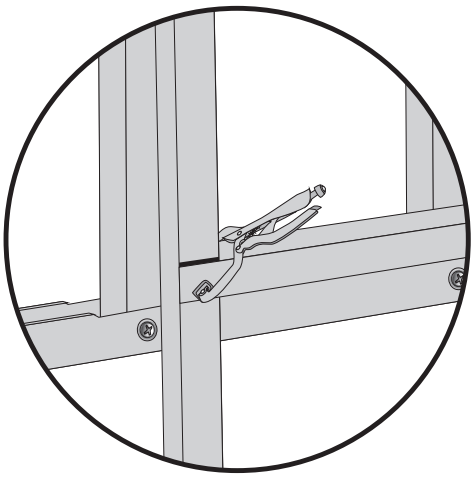

STEP 11

Use a level to make sure that the precut track is completely level to the ground. (See Inset)

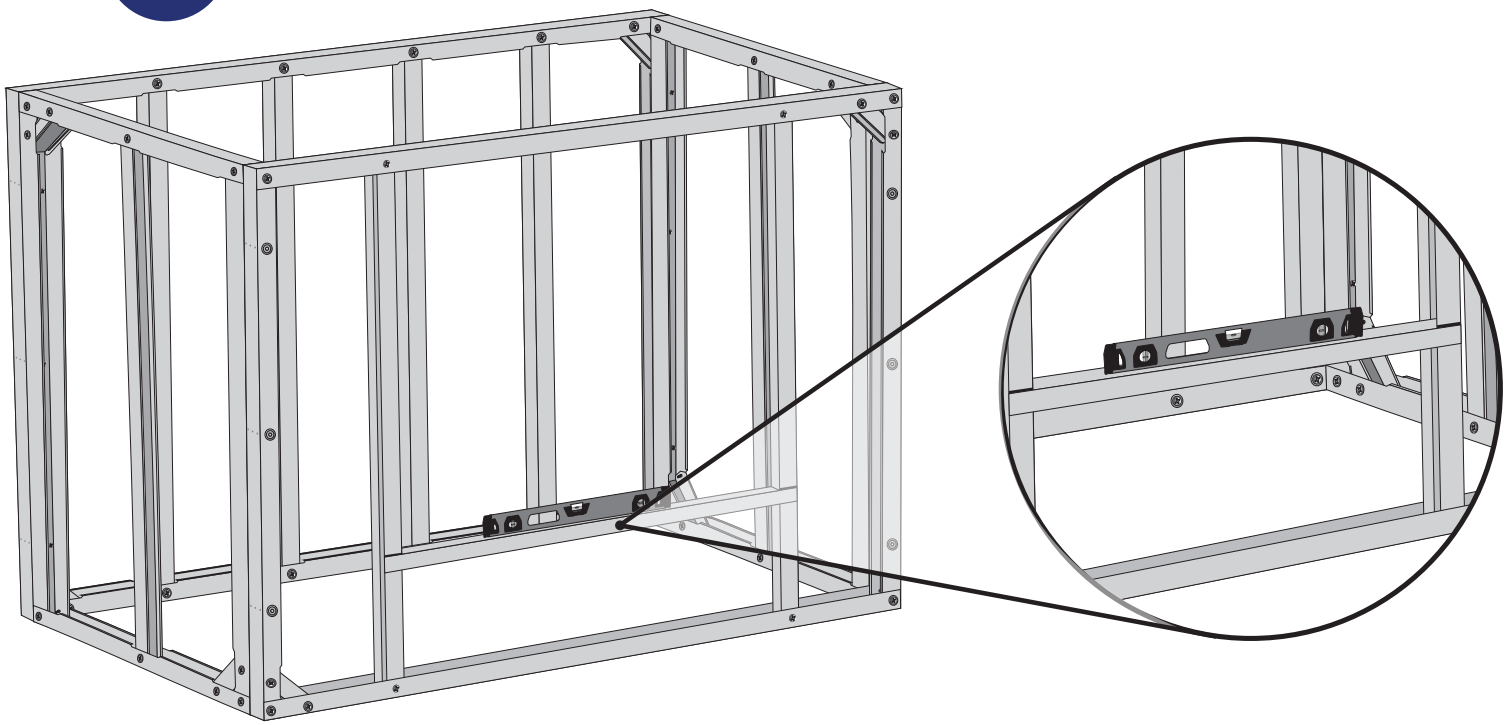

STEP 12

Drill four (4) screws to the precut track to attach the precut track to the inner Perimeter wall studs.
Note: You may now safely remove any clamps used to hold the precut track in place.

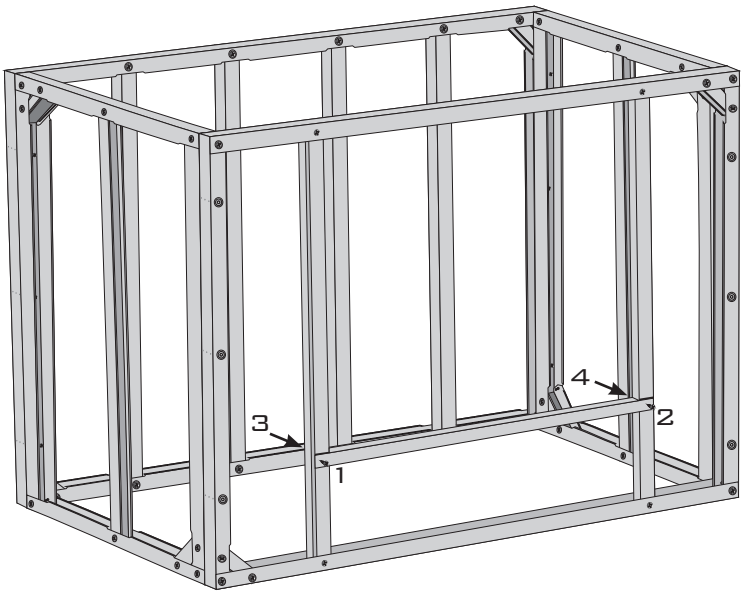

STEP 13

Measure the height of the television and mark that height on each of the front wall from the top of the bottom track placed in the previous steps.
Note: You may add an inch or two to make sure that the television sits easily within the space.

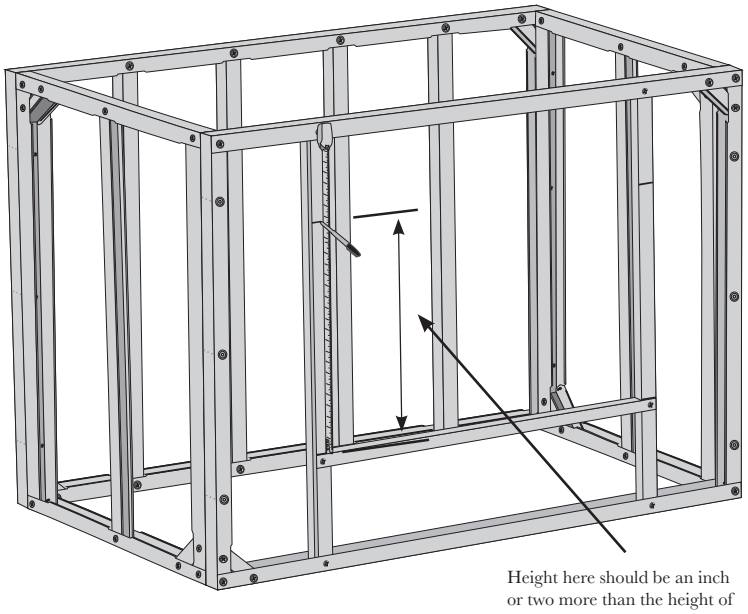

Height here should be an inch or two more than the height of the TV

STEP 14

Find the second precut track and place it in between the inner front Perimeter wall studs near the top of the module so that the top (open side) of the precut track aligns with the marks made in step 13. Make sure the open side of the precut track is facing up. If you want to make sure the precut track remains in place while attaching it to the Perimeter wall studs, add at least one clamp to secure it to the studs. Clamp(s) may be removed after step 16. (See inset)
Note: Turn to page 25 for instructions on how to measure (depending on size of television) and cut the second end of your precut track.

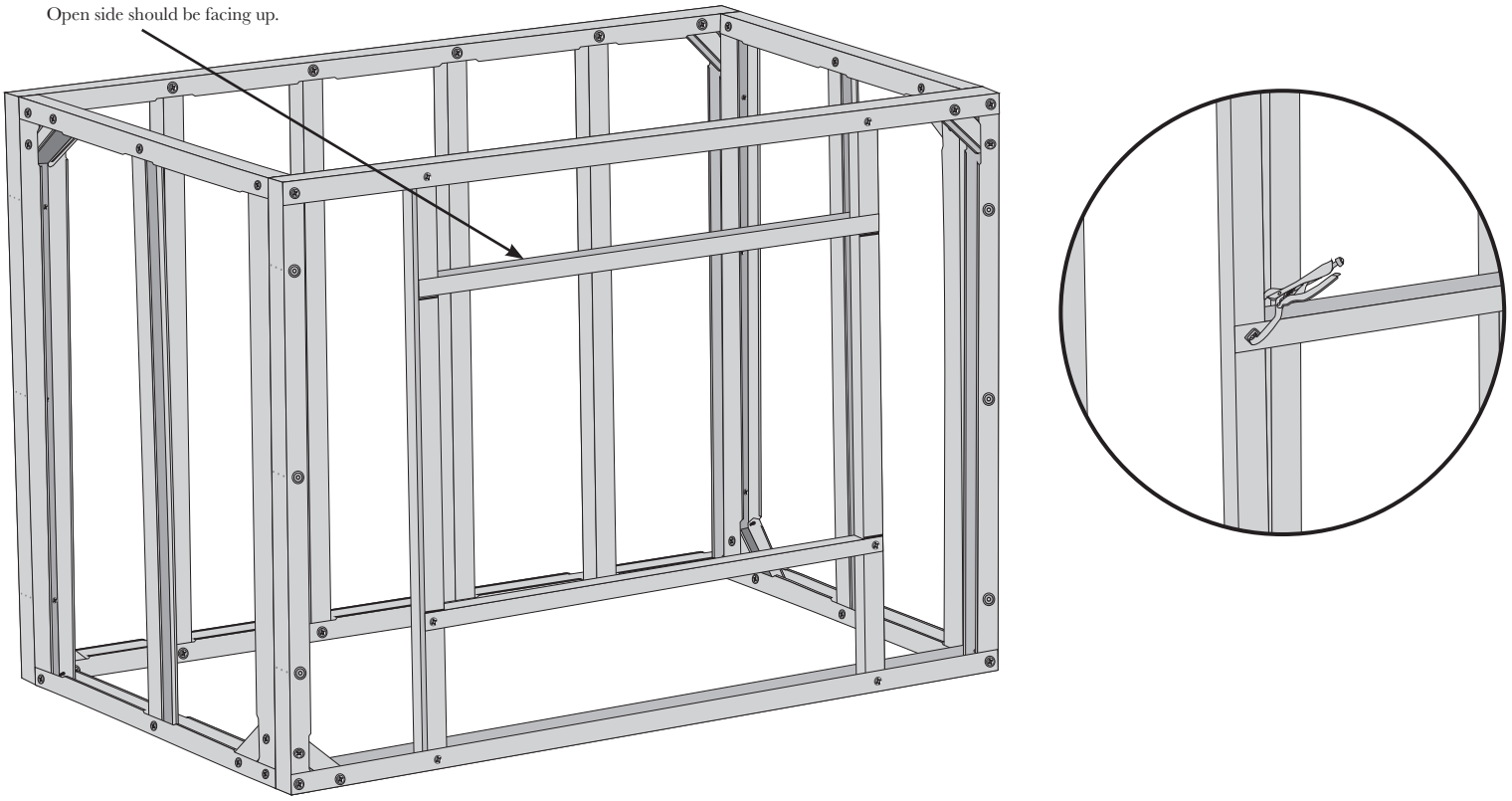

STEP 15

Use a level to make sure that the track is completely level to the ground.

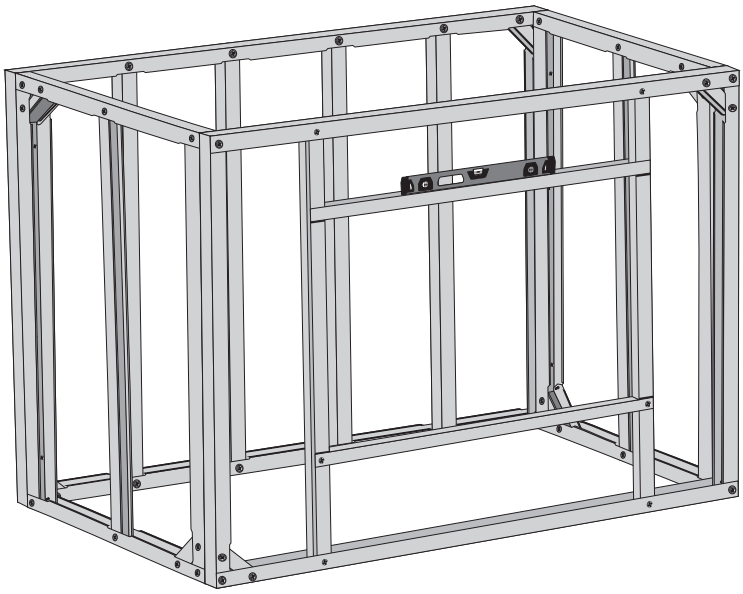

STEP 16

Drill four (4) screws to precut tracks to attach the precut track to the inner studs of the Perimeter wall.
Note: You may now safely remove any clamps used to hold the track in place.

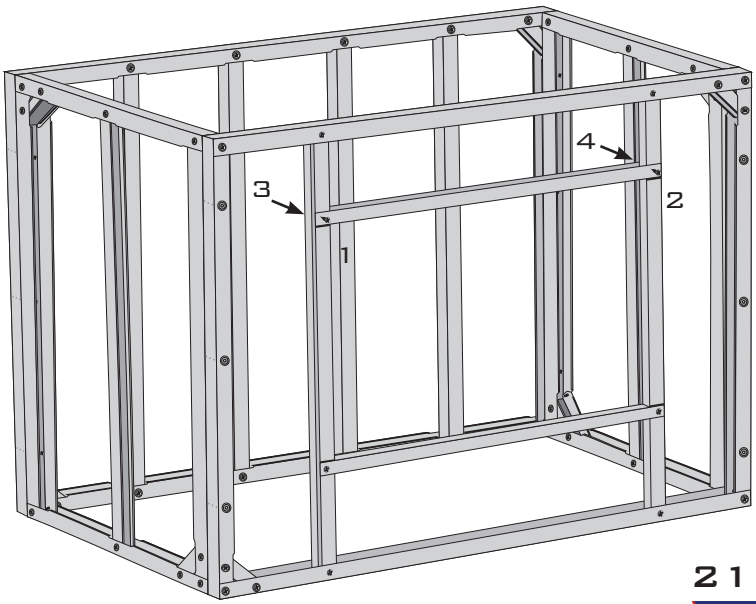

STEP 17

Lift the completed TV Chimney module and place it on top of the completed Fireplace module. Once the TV Chimney Module is on top of the Fireplace module, affix it so that the tracks on the bottom of the TV Chimney Module align/rest upon the tracks on the top of the Fireplace module. When correctly placed, all edges of the Chimney module should be flush with all edges of the Fireplace module.

Warning: Modules can be extremely heavy. Do not attempt to lift the TV Chimney module on your own. Have someone help you lift the TV Chimney module onto the Fireplace module.

Note: Fireplace Module Sold Separately.

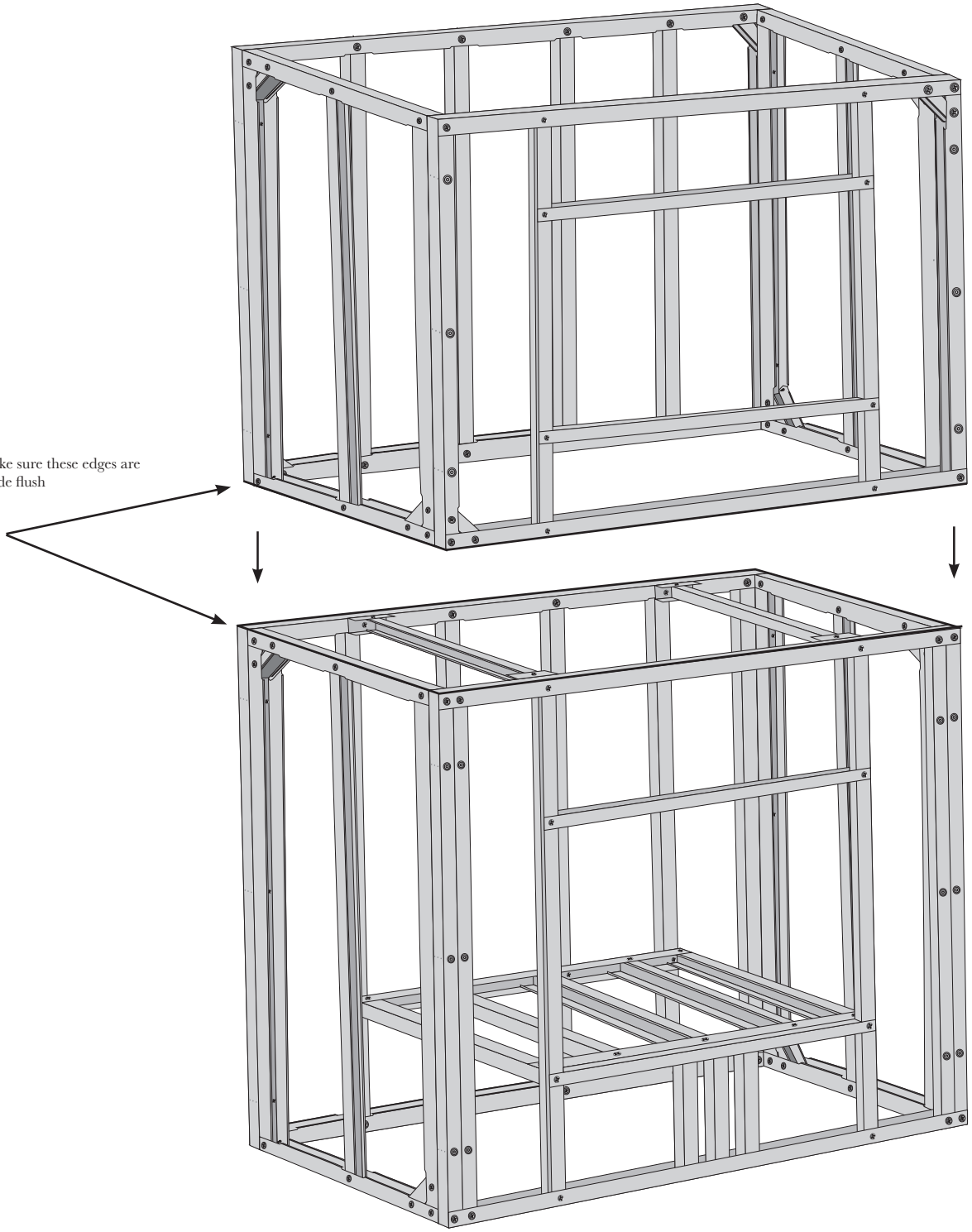

STEP 18

Drill at least eight (8) screws into the bottom tracks (at least two (2) screws per track) of the TV Chimney module to secure it to the Fireplace module.

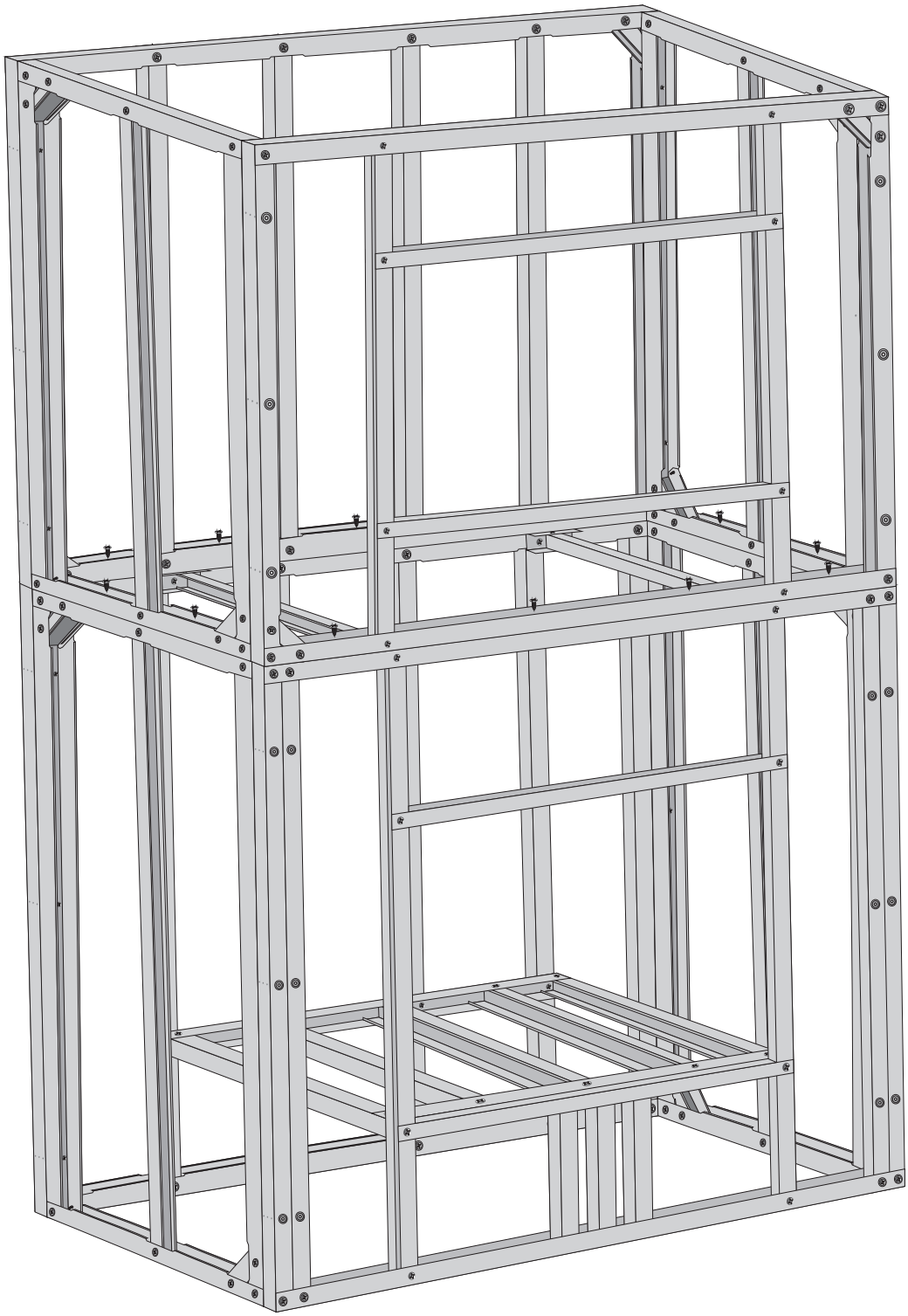

STEP 19

You should now have a completed Fireplace module with TV Chimney.

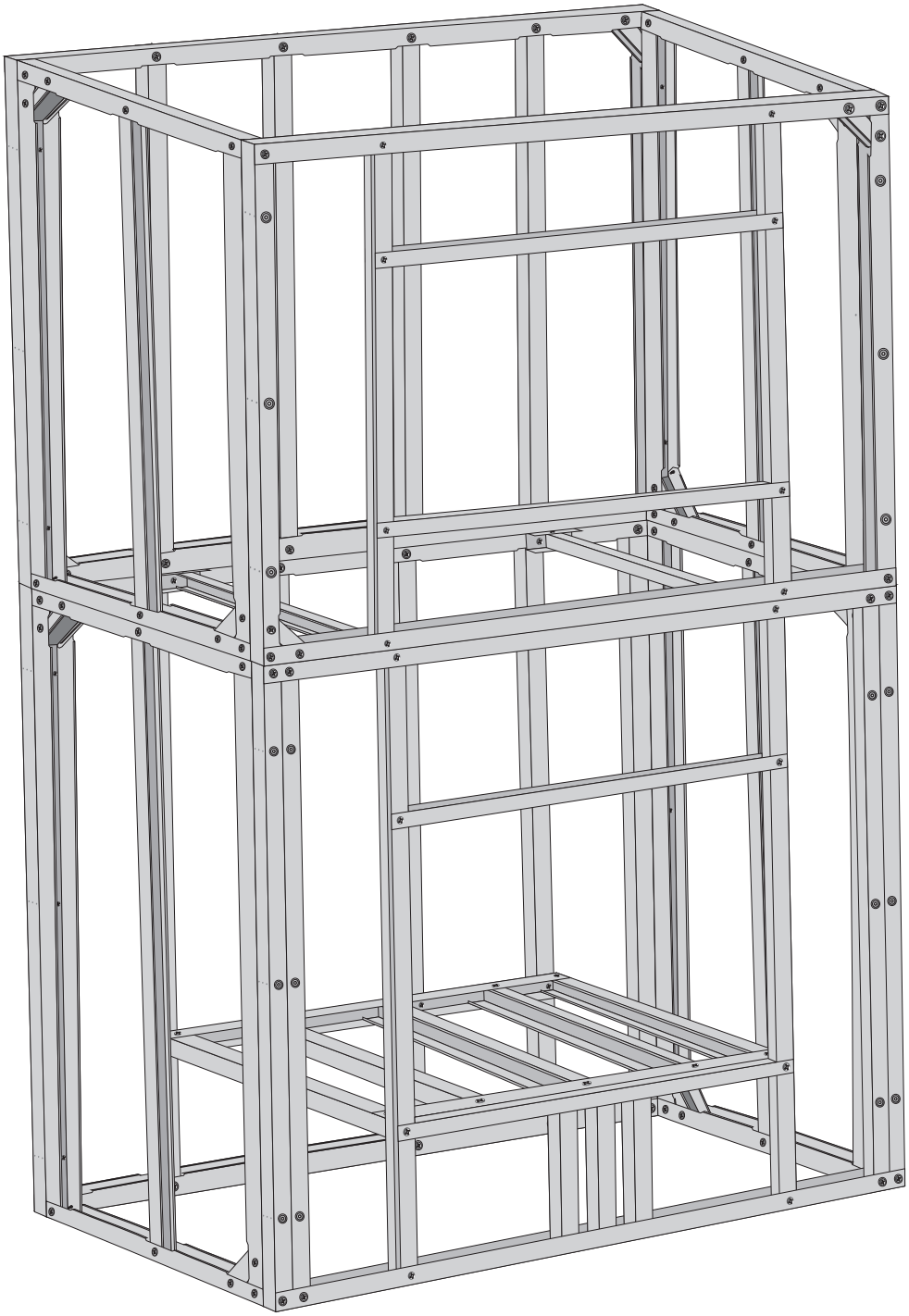

Measuring & Cutting Precut Tracks

Precut tracks are sized for length, but because you may want to adjust the size between studs, you will need to cut and adjust your Appliance Tracks manually. The following instructions will guide you through measuring and cutting your Appliance Tracks.

Step 1

All Appliance Tracks will have a precut section on one side of the Appliance Track as shown below.

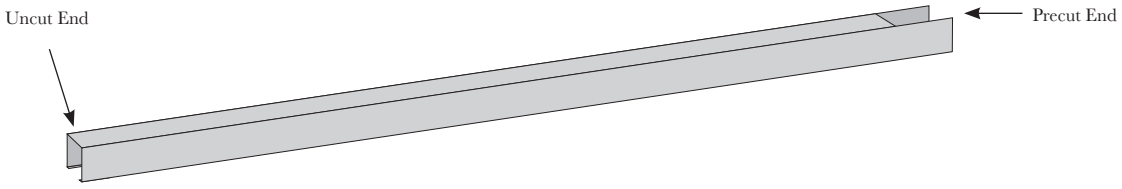

Step 2

Measure the length of the Appliance Track from the edge of the inner cut of the precut edge, and mark the Appliance Track in two places: 1) The length of the appliance; and 2) 1.5" past the length of the appliance.
Note: If your Appliance Track is already at the correct size for your appliance, measure 1.5" in from the uncut edge and make a mark. Then, skip to step 5.

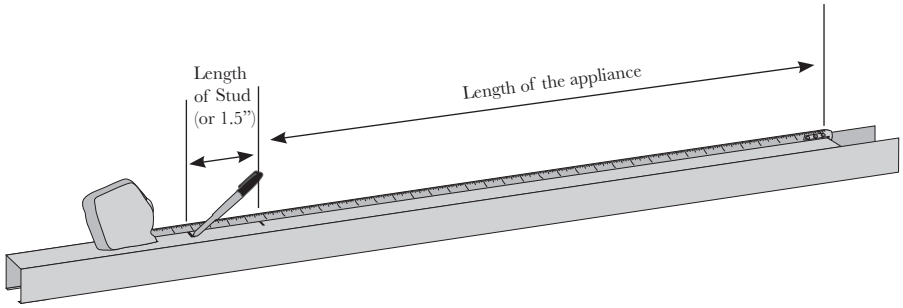

Step 3

Use the carpenter square to draw a straight line across the entirety of the top of the Appliance Track at both marks made in step 2.

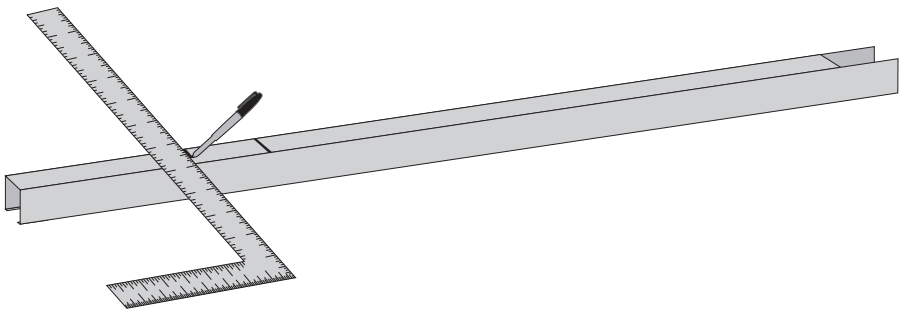

STEP 4

Fully cut the end of the Appliance Track (the mark closest to the uncut edge) and discard the excess piece. **Do not cut at the first mark. This mark will be used as a measurement in the next step.**
Note: It is much easier to cut the track with a cutoff wheel, however, if you are not comfortable with using the cutoff wheel, aviation snips will work as well. (See inset)

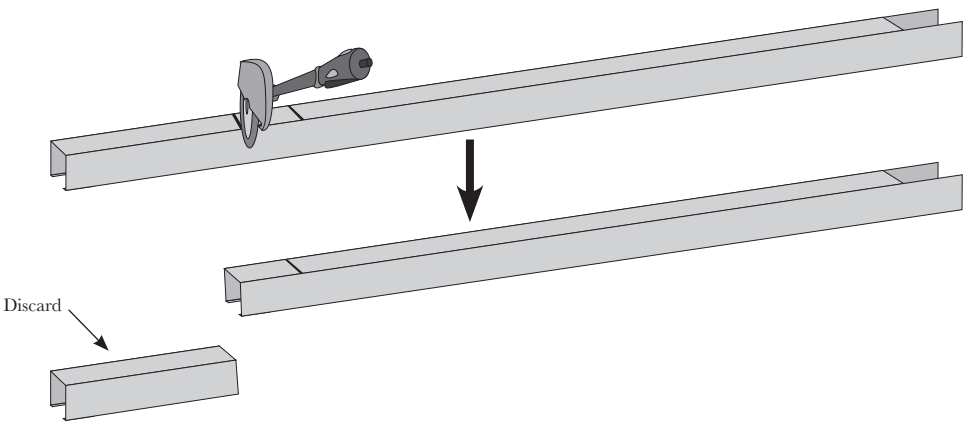

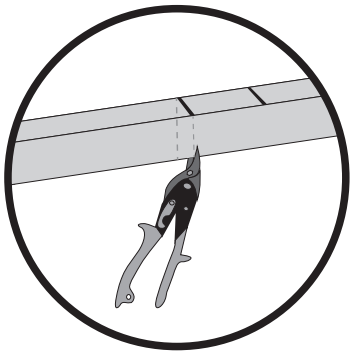

STEP 5

Use your aviation snips to cut along each side of the top edge from the end of the Appliance Track to the first mark.
Note: If you did not have to cut your Appliance Track to fit (or were able to skip steps 3 and 4), make sure you've measured 1.5" in from the uncut end to denote the length to which you should cut.

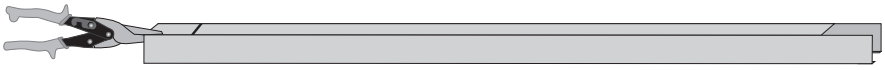

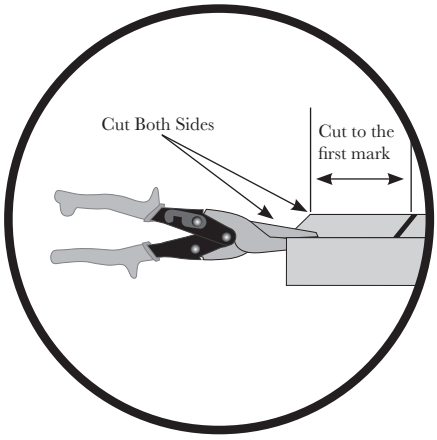

STEP 6

Use your aviation snips to pinch the center of the edge of the Appliance Track (between the cuts made in Step 5) and bend the center piece downward.

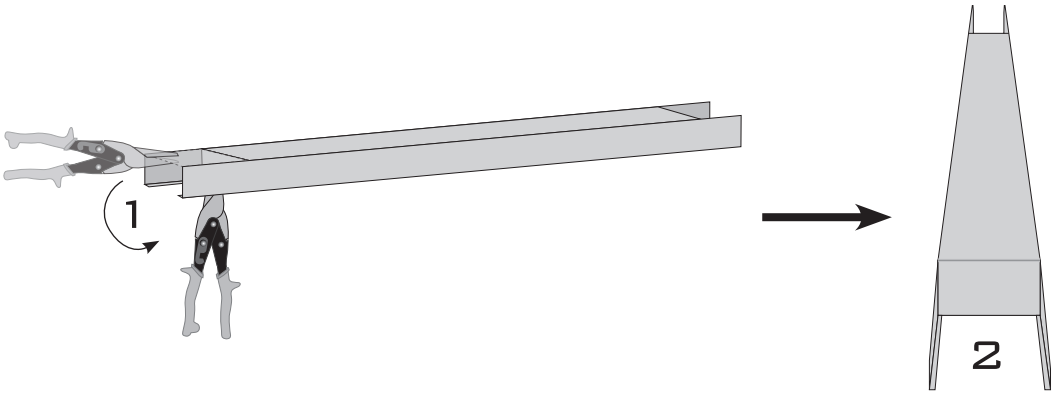

You now have a correctly sized Appliance Track.

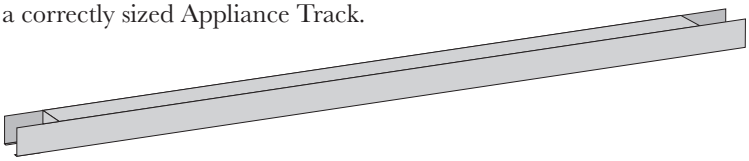

Step 1

Measure the length of the Track to the length of the appliance you are placing within your module and mark the track.
Note: The size of the Long Catch Track doesn't have to match the length of the Perimeter Wall Track exactly.

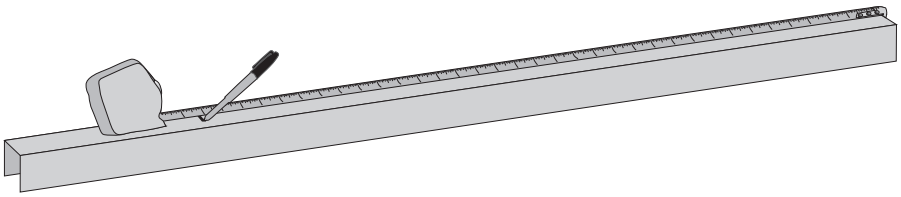

Step 2

Use the carpenter square to draw a straight line across the entirety of the top of the Track where marked in step 1.

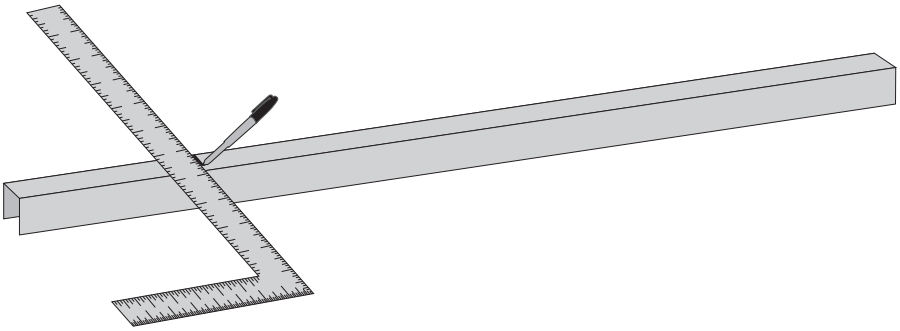

Step 3

Fully cut the end of the Track and discard the excess piece.
Note: It is much easier to cut the track with a cutoff wheel, however, if you are not comfortable with using the cutoff wheel, aviation snips will work as well. (See inset)

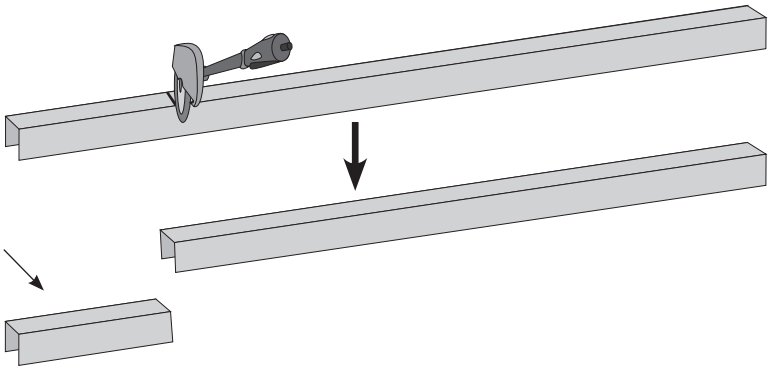

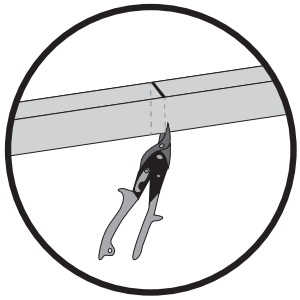

You now have a correctly sized Track.

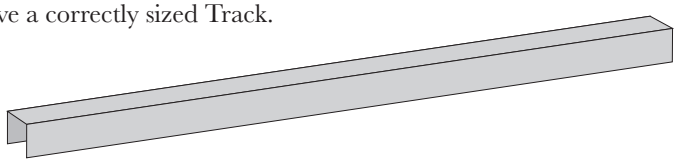

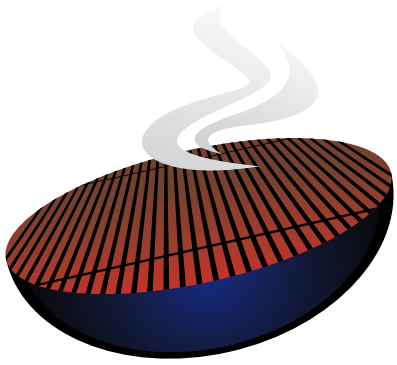

@2019 DIYBBQ. All Rights Reserved.